State-of-the-Art Heating, Cooling, Domestic Hot Water & Ventilation System

Integration of solar energy and water to water variable ground source heat pump technology including a desuperheater, a ground to air heat exchanger and 85-97% efficient ERV with fan-coils to regulate humidity, high thermal mass concrete structures using hydronic-radiant heating and cooling, and state-of-the-art object based programmable automated controls with wireless smart device capability.

Key Components: Integrated HVAC System

- Solar thermal or PV/T panels integrated with a thermal battery system
- 2nd stage water to water ground source heat pump and desuperheater
- Hydronic-radiant floor heating, cooling, and domestic hot water (DHW)
- 3rd stage forced air “latent” heating and cooling integrated with ERV and ground to air heat exchanger
- High thermal mass and air tight envelope via super-insulated concrete structure
- Integrated HVAC programmable automated controls (PAC) including outdoor temperature reset, indoor temperature feedback, smart zoning/synchronization, and high speed variable mixing pump injector for hydronic delivery
- Providing unprecedented energy efficiency and modified internal rate of return (MIRR) using Passive House technology for Zero Net Energy (ZNE) Homes

Heat Delivery Methods

- There are two primary methods of space heating: radiant and convective heat transfer.
- Strategically designed hydronic systems such as concrete radiant floors use relatively low temperature delivery (75-85°F for heating and 55-65°F for cooling) and are the most efficient. Unlike convection heating which requires heating the air, radiant systems heat only the objects in a room. This requires considerable less energy than convection heating.
- Radiant floors, when warmer than the surrounding air surface, give off invisible electro-magnetic waves that travel in a straight direction up from the floor until they hit a solid object which is then warmed.
- In contrast, convective heating requires heating the entire room. In order to get the floor warm, the air around the ceiling and the ceiling itself are overheated.

Occupant Comfort & Radiant Heating

- Unlike convective heating, radiant floor heating is more concerned with heat loss from an occupant’s body.
- The human body is a radiator of sorts, it produces more heat than is needed to survive, and hence it must release some of this thermal energy to be comfortable. This is accomplished in three ways:
  - By evaporation (when we perspire or breathe)
  - By convection (when air moves across our bodies)
  - And, most importantly by radiation (because heat naturally moves towards cold air and cold objects)

Radiant Heat Phenomena

- The human body loses half of its heat by radiating it to surrounding objects. When we stand next to something warmer than us, we feel hot. When we stand near a cold object, we feel cold – regardless of the air temperature around us. Hence, air temperature is less important to comfort than people think.
- Radiant heat strives to control the radiant heat loss from the occupant's body by making the temperature of objects surrounding them the same temperature as the surface of a clothed person, e.g., 85°F. If the surfaces of objects around the occupants are at 85°F, occupants will feel warm and comfortable even though the air temperature may be 5 °F cooler than the occupants are used to having it with a convective heating system. This is a strategic advantage for using radiant heating.

Solar Thermal & Hydronic-Radiant Floor Heating of High Mass Structures

- Since water is vastly superior to air as a medium for heat transfer, and it requires 90% less energy to pump water than to push/blow air, radiant floors are ideal for integration with high mass concrete structures and solar thermal collectors.
- Because radiant floor systems heat solid objects instead of air, room temperatures stay the same from the floor to the ceiling. Thus, radiant heating and cooling systems require considerably less energy.
- Low temperature radiant heat is the most comfortable form of heat delivery for occupants. It allows for minimizing the temperature differentials (ΔT) for heating and cooling delivery systems.

Integrated HVAC System

- Solar thermal collectors, PV collectors, and energy storage systems combined with high thermal mass construction, radiant heating and cooling, and an energy or heat recovery ventilator with ground to air heat exchanger can efficiently meet 100% of the DHW and space heating needs of a structure on a sunny winter day.
- For inclement weather, integration of a state-of-the-art 100% variable water to water ground source heat pump (COP 7.0) and desuperheater powered primarily by the solar PV system can supplement the solar thermal collectors, provide hydronic cooling, and regulate humidity in conjunction with 2nd stage forced air provided by oversized fan-coils inserted into the ERV/HRV ducts.

ASHRAE Standard 62.2-2013-2 Ventilation for Acceptable Indoor Air Quality

- The current ASHRAE Standard 62.2-2013-2, Section 4.11.1 Total Ventilation Rate (Q_{tot}) formula is comprised of the following:
  - $Q_{tot} = 0.03A_{floor} + 7.5(N_{br} + 1)$
- Thus, for the PHMH-2600 with a full basement and 6 bedrooms in the structure, the calculation would be as follows:
  - $Q_{tot} = (0.03 \text{ x } 5200 \text{ ft}^2) + (7.5 \text{ x } 7) = 208.5 \text{ CFM}$
- If the attic space including the 1600 ft.^{2} over the garage is included in the PHMH-2600, with 8 bedrooms the ventilation rate calculation would be
  - $Q_{tot} = (0.03 \text{ x } 9400 \text{ ft}^2) + (7.5 \text{ x } 9) = 349 \text{ CFM}$
- For an air tight concrete structure such as that described above, up to 500 CFM may be required in order to provide adequate ventilation, supplemental cooling, and maintain humidity below 50%.

Filtration, Sensors & Intelligent Controls

- If MERV filtration is installed in an ERV, it will filter particles as small as 1.8 microns. A recent study of hospitals actually concluded that the rooms had better air quality using MERV 7 rather than MERV 12 filters while substantially increasing airflow and energy efficiency.
- MERV 7 filters remove more than 50% of airborne particles between 3.0 and 10.0 microns. This includes pollen, dust mite debris, mold spores, dust and dander. MERV 11 filters remove more than 85% of airborne particles between 3.0 and 10.0 microns and more than 65% of airborne particles between 1.0 and 3.0 microns. This includes tobacco smoke particles, pollen, dust mite debris, mold spores, dust and dander.
- In addition, sensors and intelligent controls can be installed to monitor carbon monoxide, carbon dioxide, radon, and a host of other contaminants that must be removed via ventilation and air circulation. However, if ventilation is designed to simultaneously regulate humidity and supplement radiant floor heating and cooling systems via hot/chilled water coils, MERV 7 filtration should be more than sufficient to remove contaminants from outside air.

Loren Cook Company ERVs

- For relatively large residential ERV applications, the Loren Cook Company provides an opportunity to use ECMs in conjunction with a ground to air heat exchanger, and hot/cold water coils or local air handlers depending on system design.
- The versatility of the belt-drive options provide high velocity forced air (beginning at 1500 CFM) that may be suitable for small duct systems. The aspiration provided by the SDHV technology compliments radiant floor systems for about $3/CFM installed.
- Hot and cold water will be provided by the integrated solar thermal and the water to water variable GSHP with desuperheater.

Cook ERV Description & Characteristics

- The Cook ERV has two separate airstreams, an exhaust airstream and a supply airstream. The primary feature of the ERV is an enthalpy wheel that rotates slowly (45 RPM) through both airstreams.
- The wheel has small passageways or flutes that the air flows through. As air passes through the wheel, the wheel captures heat and moisture from the warm airstream then releases it into the cool airstream.
- Positive seals around the wheel assure minimal cross leakage between the exhaust and supply airstreams. The mass of the wheel captures heat in one airstream and releases it into the cooler airstream. This is defined as sensible heat transfer.

Percent Effectiveness of ERV

- The wheel also adsorbs moisture from one airstream and releases it into the dryer airstream.
- This is defined as latent heat transfer. The total energy transferred from one airstream to the other is the sum of the sensible and latent energy transfer. This is defined as the total heat transfer.
- The measure of an ERV’s heat transfer performance is defined as the percent effectiveness. The examples below illustrate the ERV’s performance in both summer and winter modes, providing up to 85% heat transfer effectiveness.

Cook ERV with Coils via Ducted Air Handlers

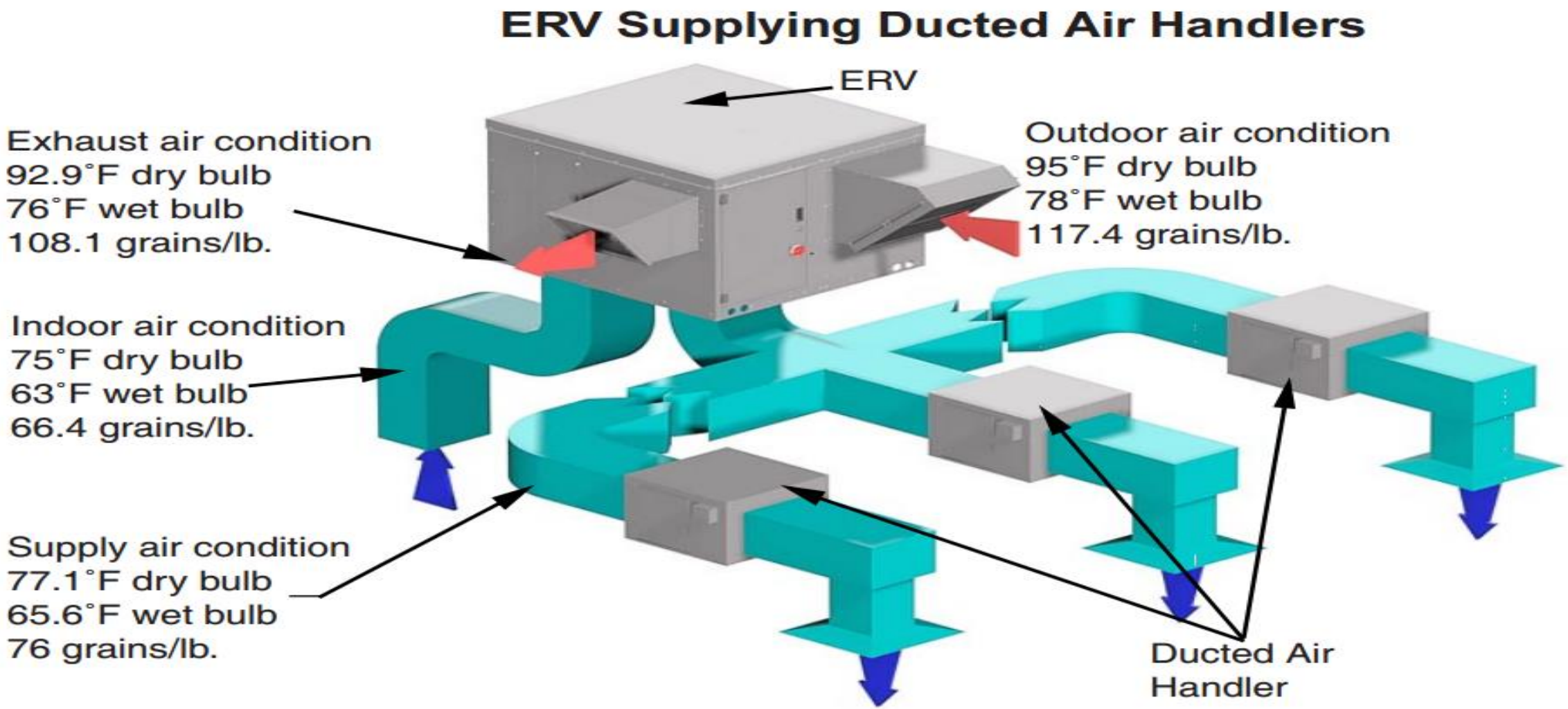

Cook ERV with Hot & Cold Water Coils

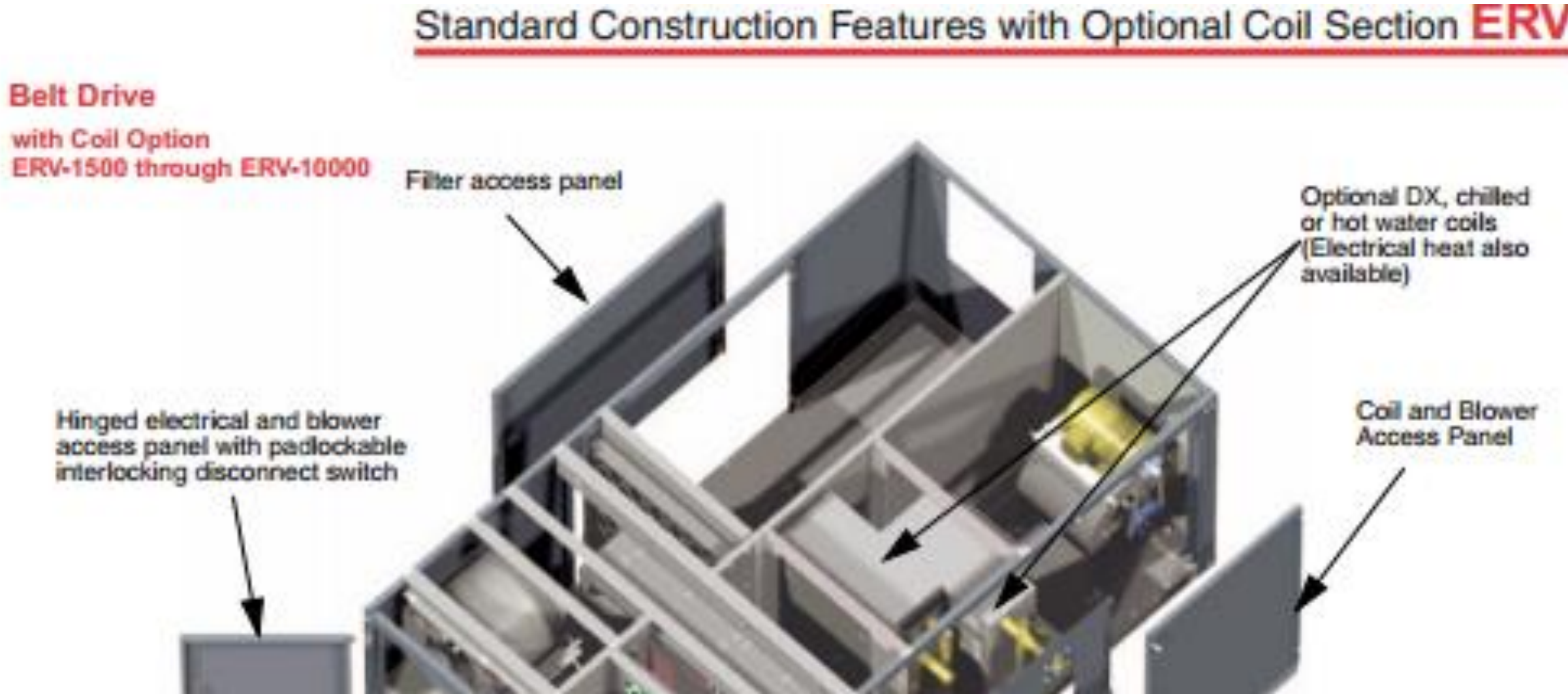

Cook ERV Chilled Water Coil Capacity in Conjunction with Air Handlers & Zoning

Summer Cooling - Options include: DX or Chilled water coil

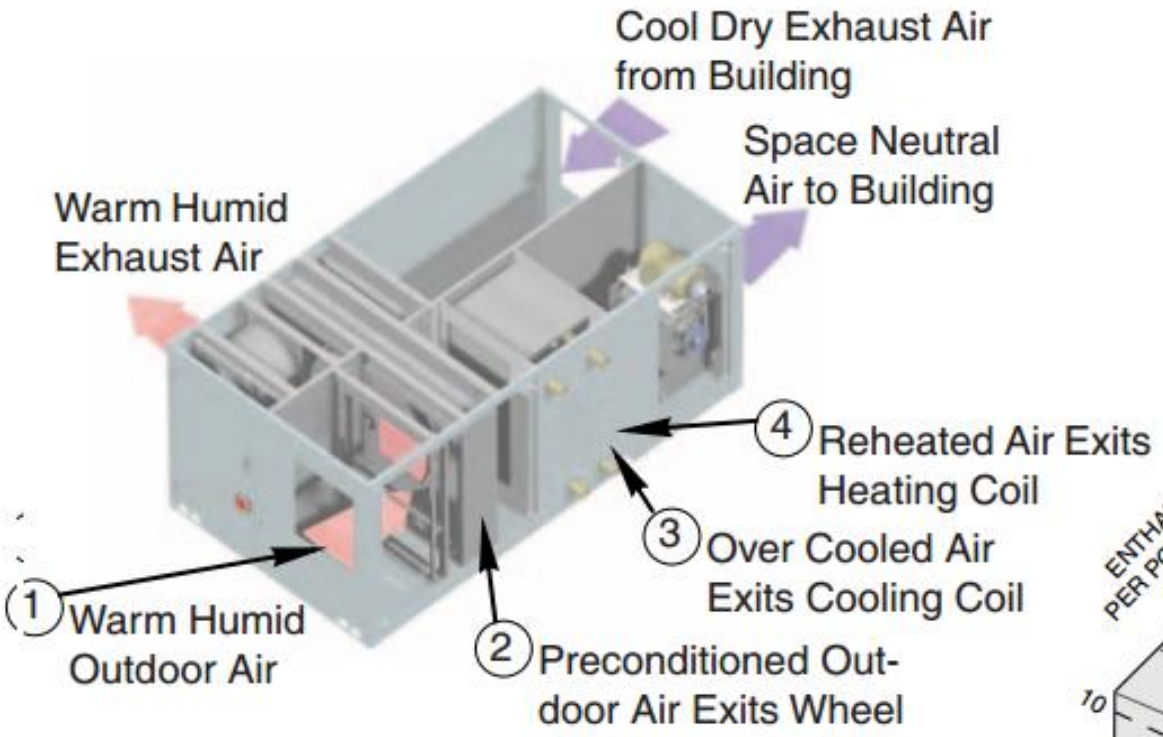

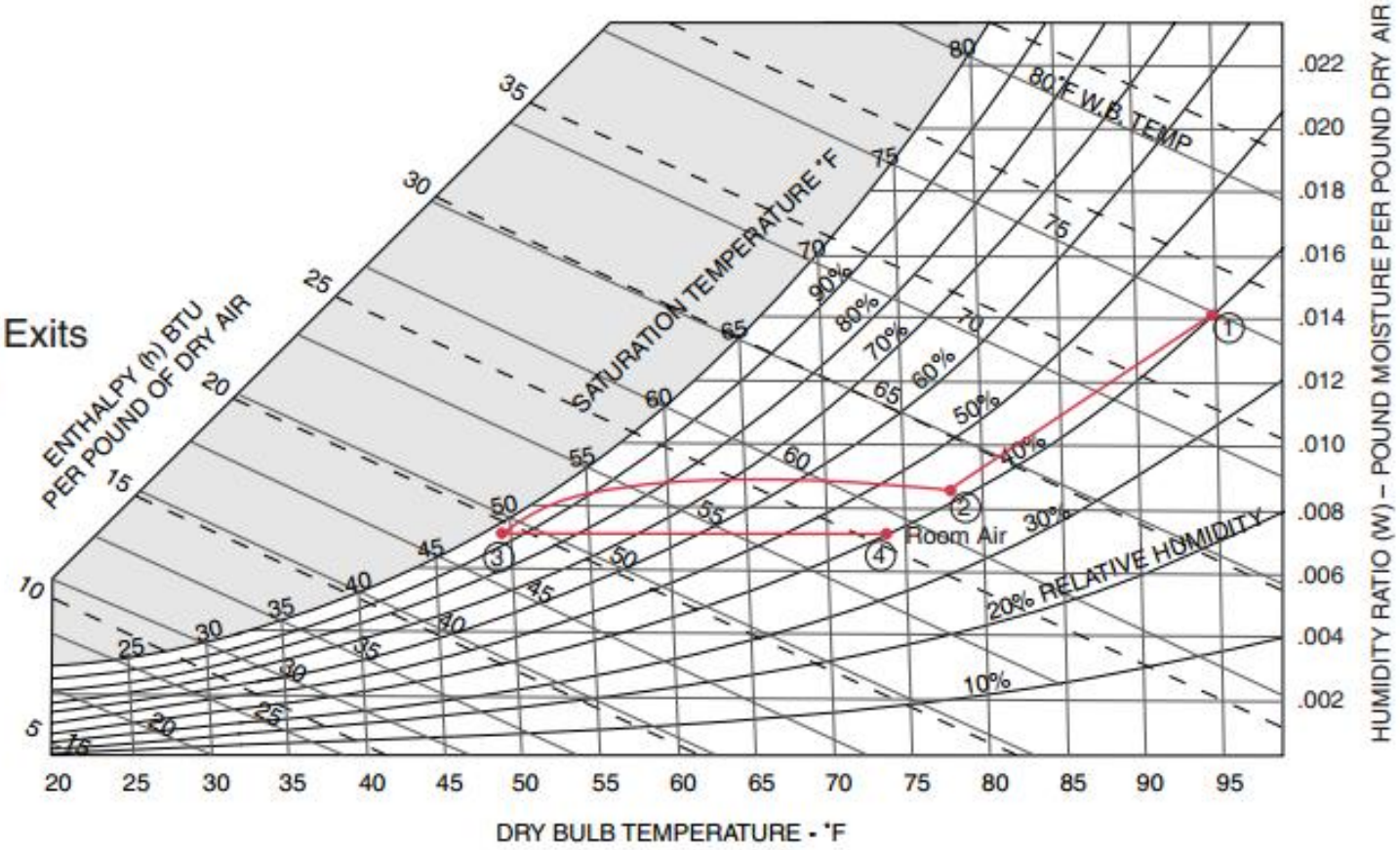

- The cooling coil further cools and dehumidifies the incoming air.
- A heating coil can reheat the overcooled air to

COOK Direct Drive ERV Winter Heating Capacity in Conjunction with Air Handlers & Zoning

Winter

- Warms incoming outdoor air through sensible heat transfer and raises humidity through latent heat transfer. Effectiveness rates are up to 85 percent.
- Allows building owners to conserve up to 60,000 BTU per 1,000 CFM.
- The ERV is an ideal solution for reducing energy use and maintaining relative humidity levels above 25 percent.

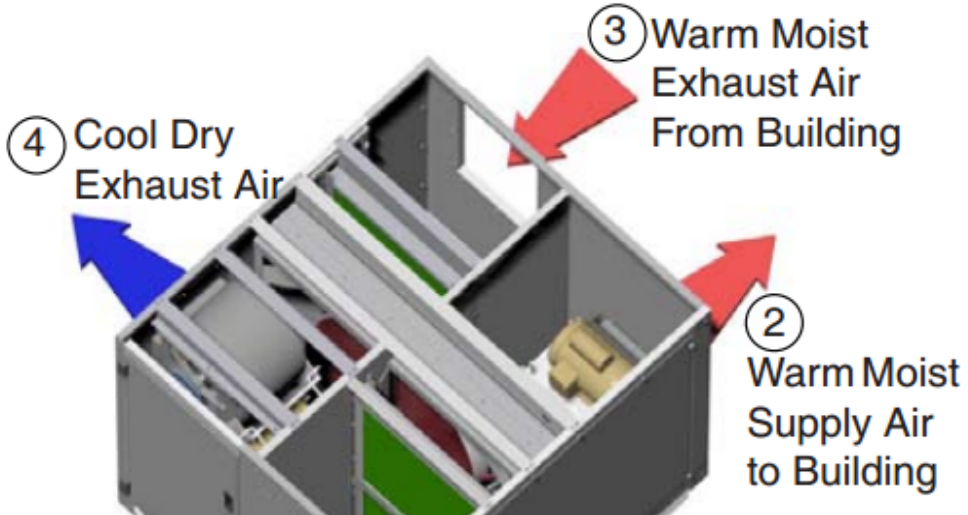

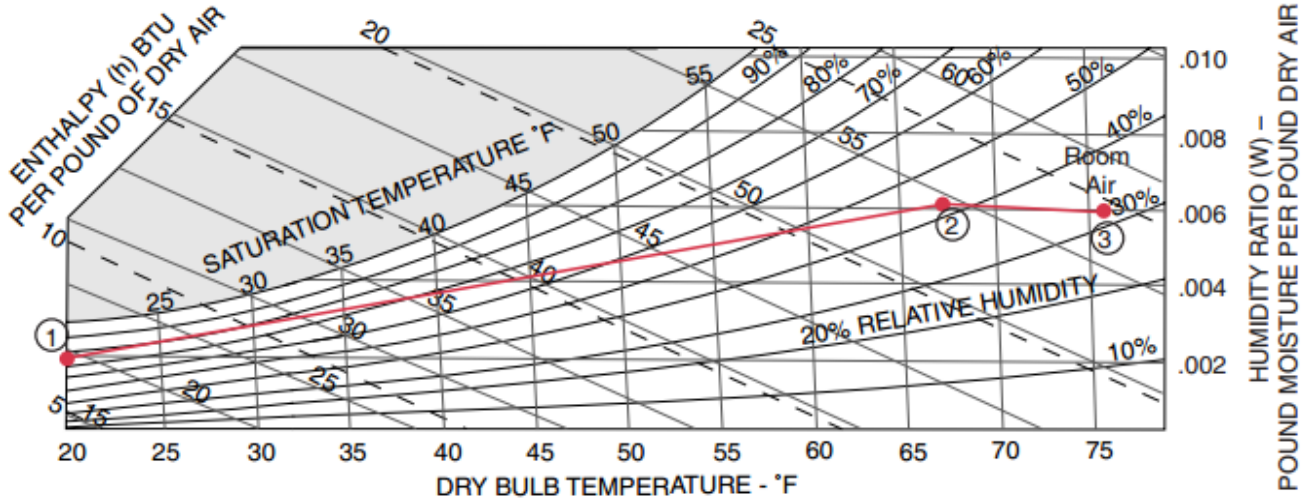

Psychrometric Chart Illustrating Typical ERV Winter Performance

A = Energy required to condition outdoor air to indoor air conditions.
B = Energy reclaimed by an ERV.

$$\%\text{Effectiveness} = \frac{B}{A} = \frac{h_2 - h_1}{h_3 - h_1}$$

Note: For unequal airflow the effectiveness will increase in the airstream with the lower airflow and will decrease in the

ERV - 500 Data

ERV - 500 Supply

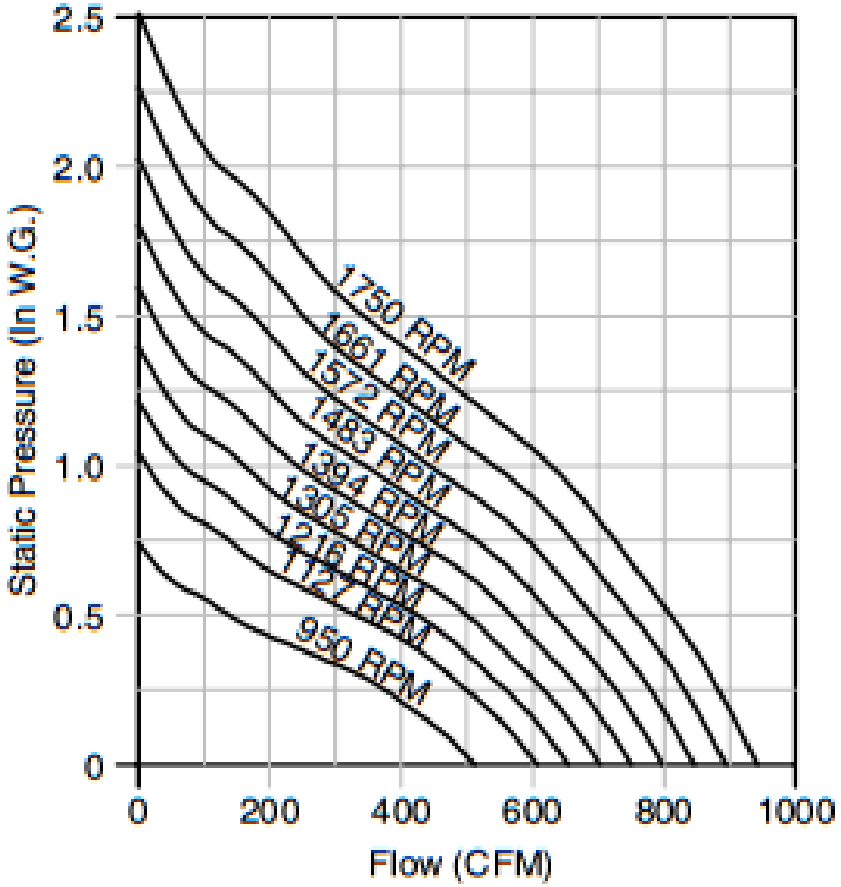

ERV - 500 Exhaust

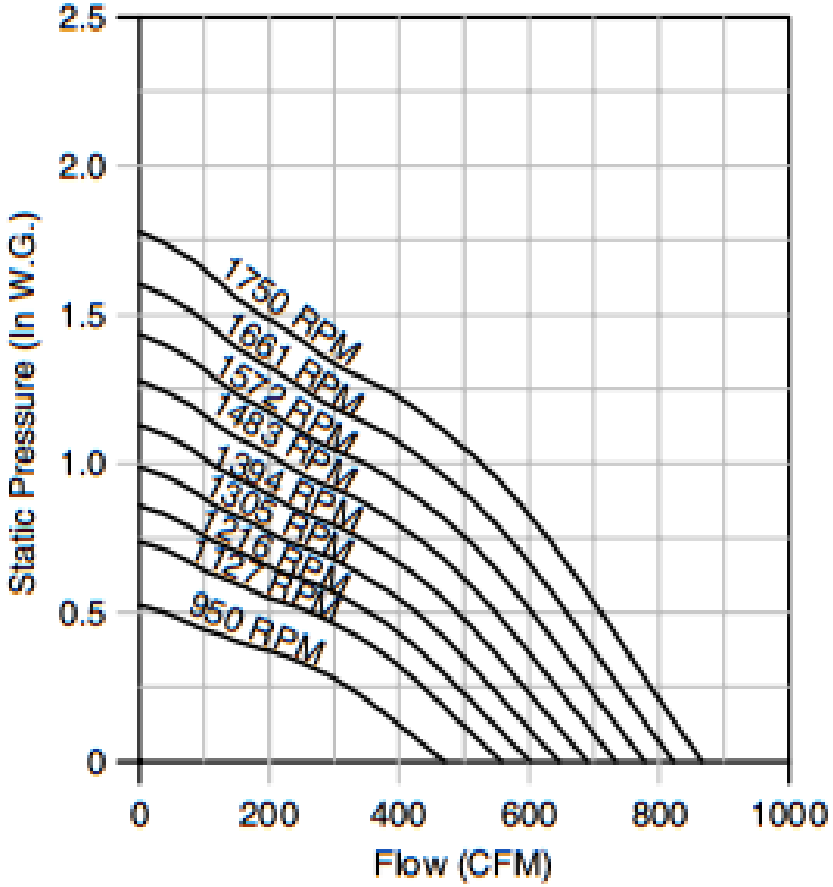

Energy Recovery Wheel Diameter - 18"
Direct Drive
Maximum MHP - 1/2
Maximum Input Watts: 520 - Supply
566 - Exhaust
Cabinet - 18 ga. steel
Shipping Weight - 285 lbs.

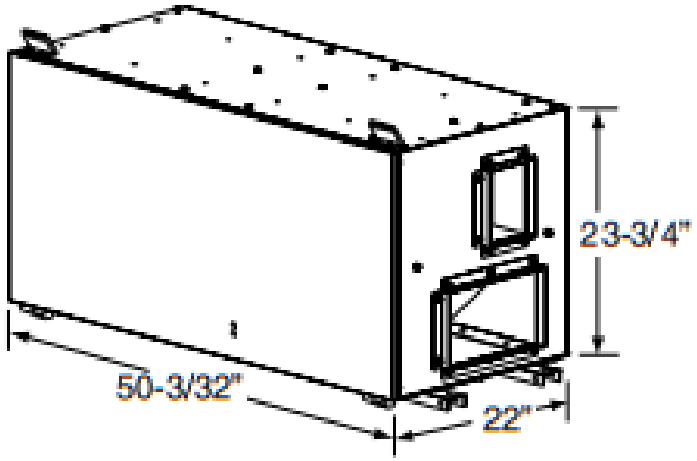

ERV - 500 Supply

Catalog Number	RPM	0.125 SP		0.250 SP		0.375 SP		0.500 SP		0.750 SP		1.000 SP		1.250 SP		1.500 SP	
		CFM	EFF	CFM	EFF	CFM	EFF	CFM	EFF	CFM	EFF	CFM	EFF	CFM	EFF	CFM	EFF
	950	453	73%	375	76%	259	82%	138	89%								
	1000	484	71%	411	75%	313	79%	187	86%								
	1050	514	70%	446	73%	365	77%	246	83%	57	94%						
	1100	544	68%	481	71%	409	75%	302	80%	113	90%						

Cook Belt Driven ERV Cooling Coil Capacity

Summer Cooling - Options include: DX or Chilled water coil

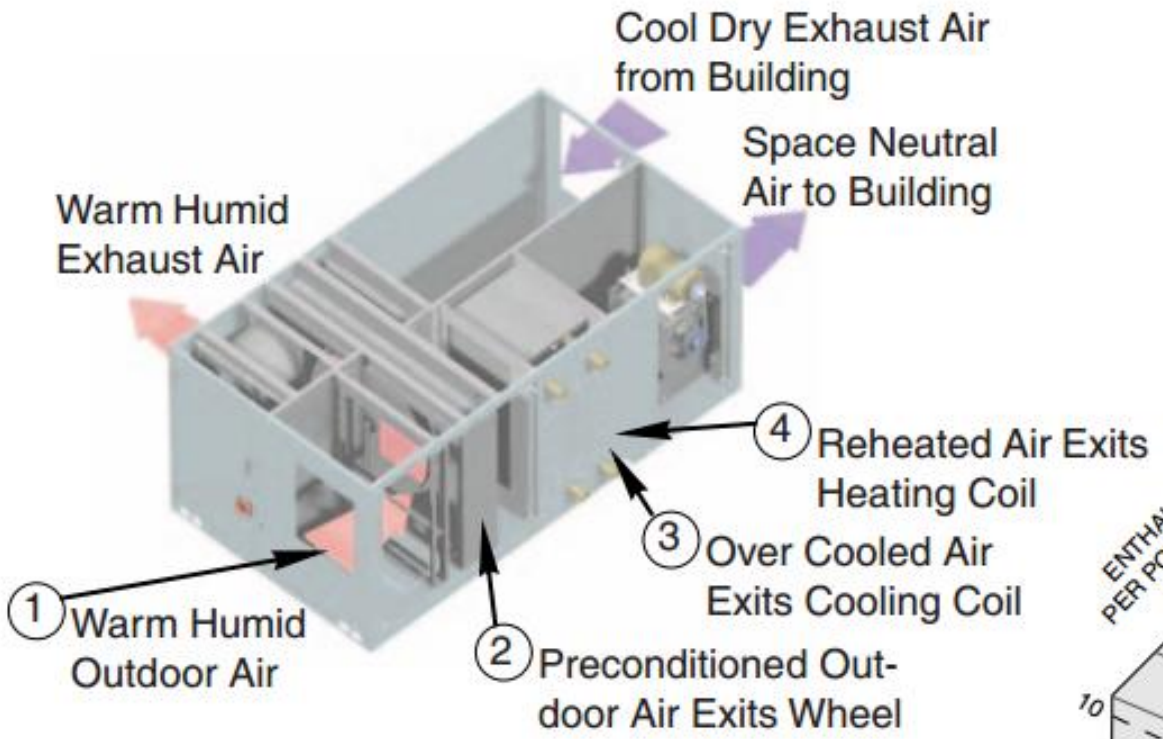

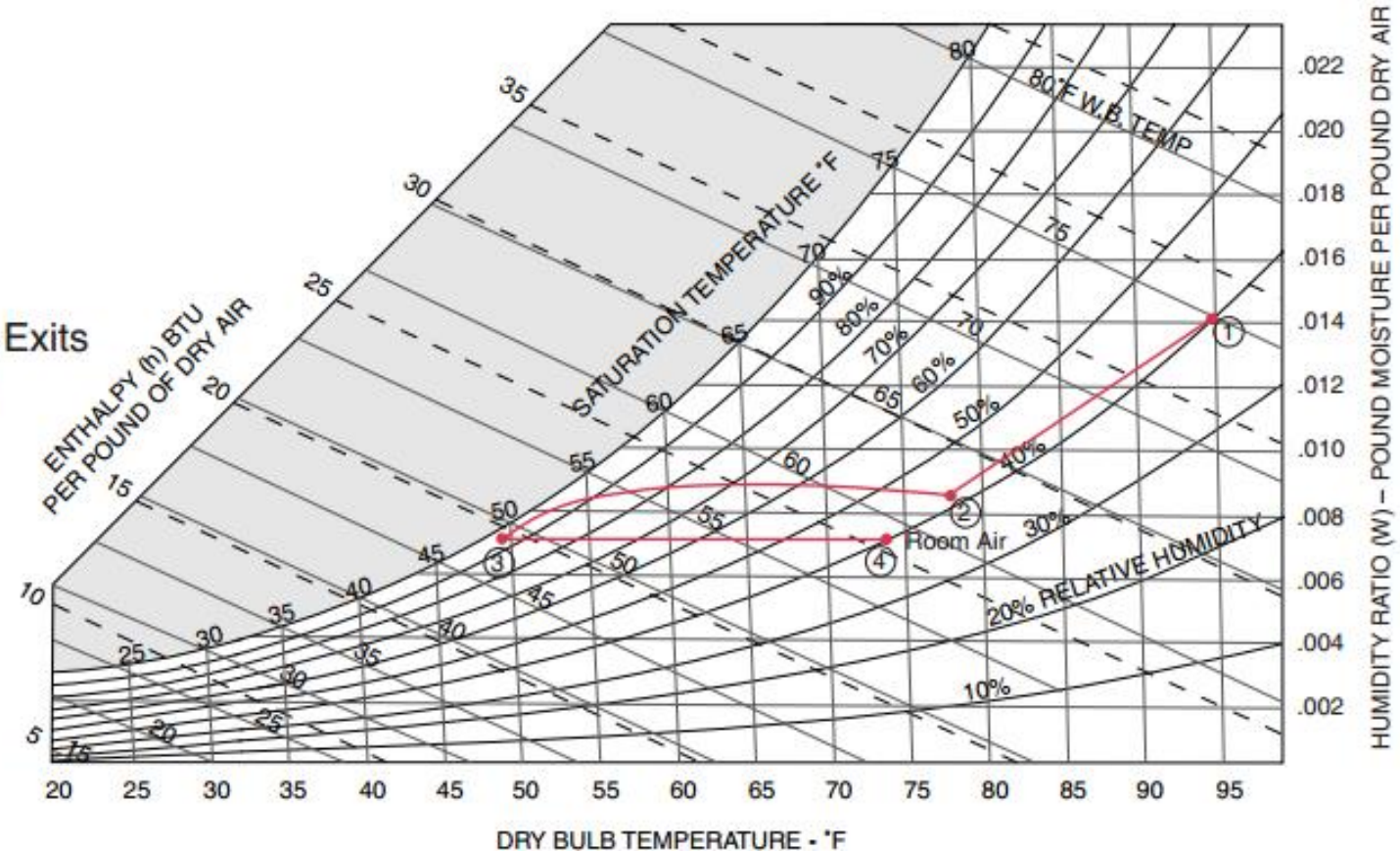

- The cooling coil further cools and dehumidifies the incoming air.
- A heating coil can reheat the overcooled air to

Cook Belt Driven ERV Heating Coil Capacity

Winter Heating - Options include: Electric or hot water coil.

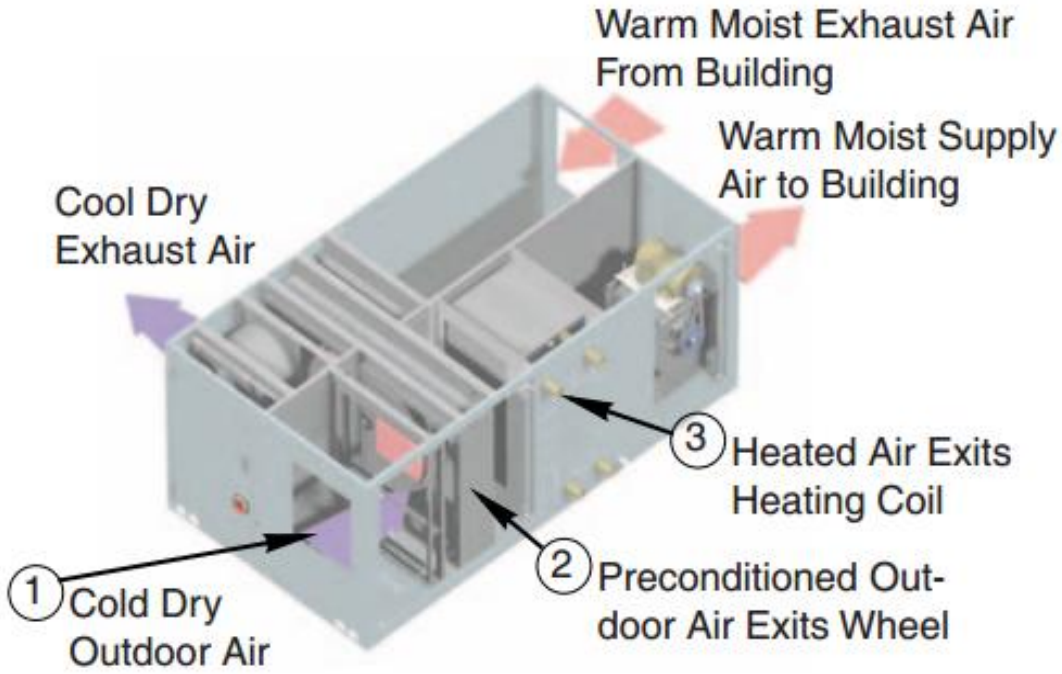

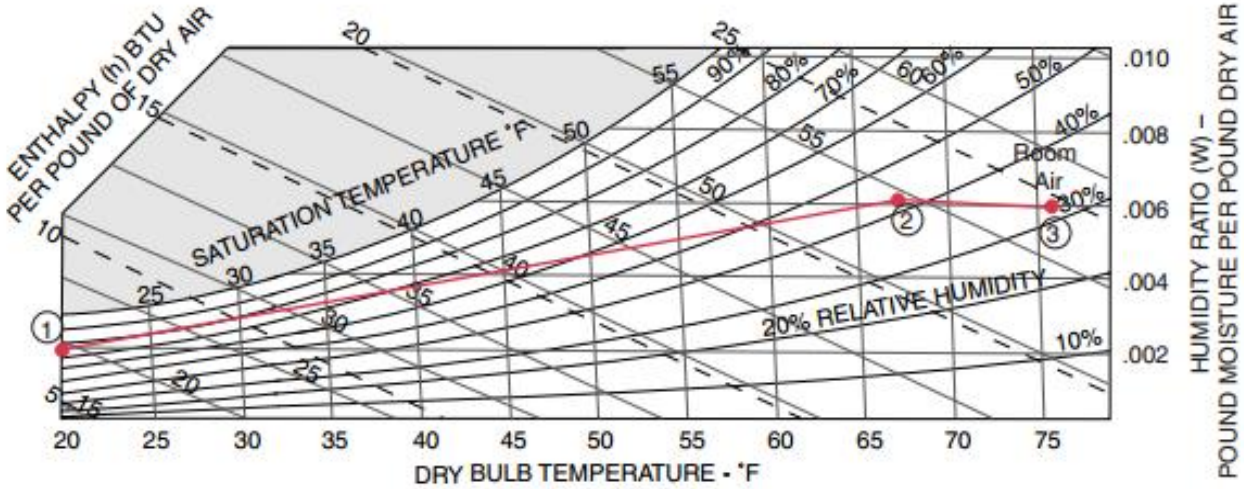

- The heating coil heats the air to space neutral conditions at the supply outlet.
- Allows engineers to design and specify only one unit for their energy recovery and heating needs.
- Heating coils can also be utilized during the sum

① 20˚F dry bulb, 18˚F wet bulb, 75% RH, .002 (lb./lb.), 11 (grains/lb.), 7 (BTU/lb.)
② 67˚F dry bulb, 54˚F wet bulb, 43% RH, .006 (lb./lb.), 42 (grains/lb.), 23 (BTU/lb.)

Minimizing ΔT (Temperature Differential)

- The less energy required by an HVAC system to meet DHW and space heating and cooling requirements, the more efficient that system will be.
- In conjunction with high-thermal mass design for radiant floor heating and cooling, up to 40% of the energy of high-mass structures can be conserved. Heat from a radiant system does not rise like heated air from a traditional heating unit; it spreads in all directions. This characteristic makes it possible to heat a large area using a lower temperature.
- This allows for minimizing the ΔT of the HVAC system for that structure. In other words, the entering water temperature (85-95°F) and the leaving water temperature (75-85°F) of the radiant system can be as little as 10-20°F, possibly less than 10°F for strategic passive house designs that use ¾ or 1 inch PEX tubes on 8” centers that are counterwound.

Integrated HVAC System Flow Chart

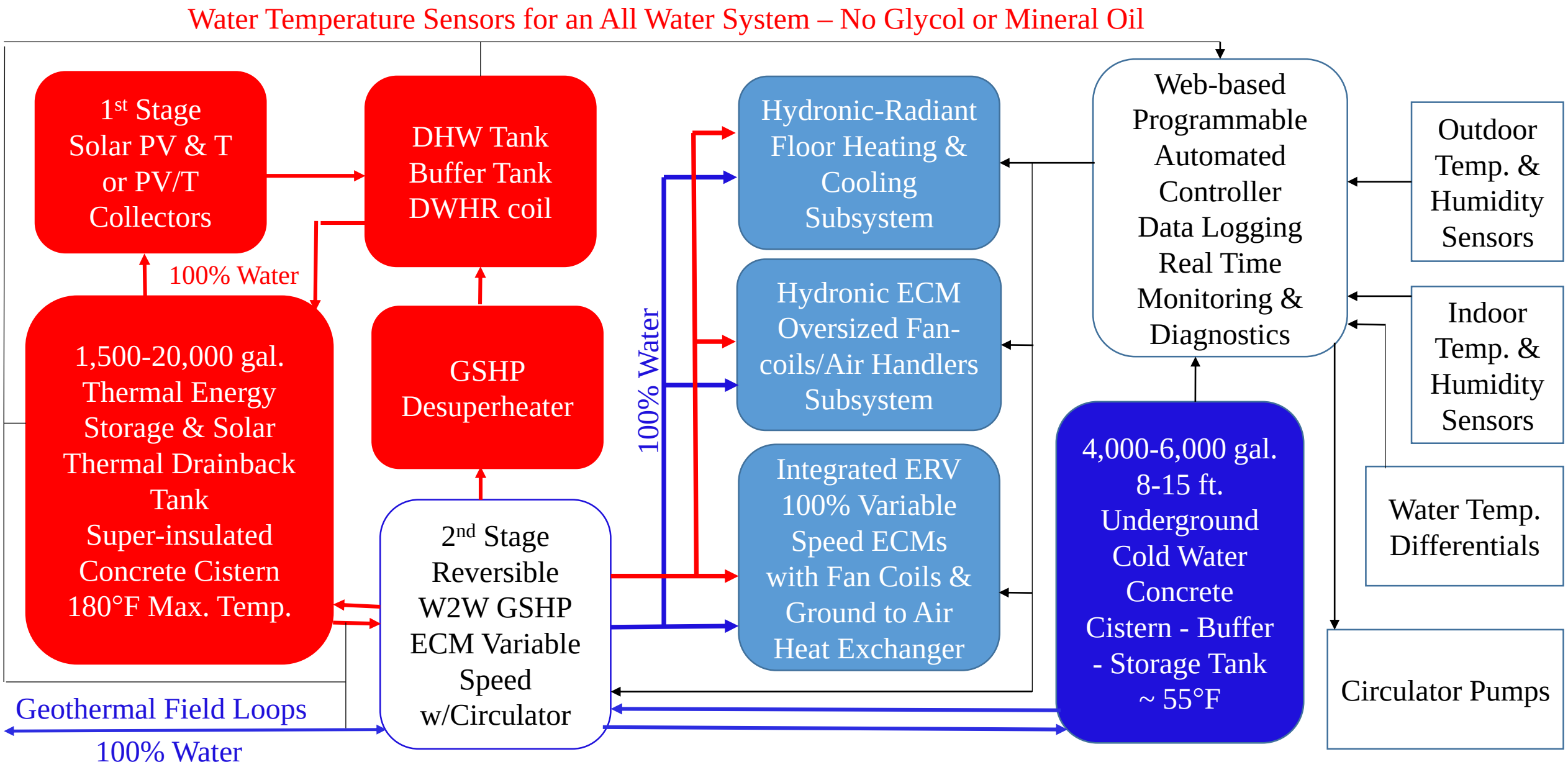

Geo-Solar Hybrid Heating & Cooling Control Diagram w/o ERV & Desuperheater

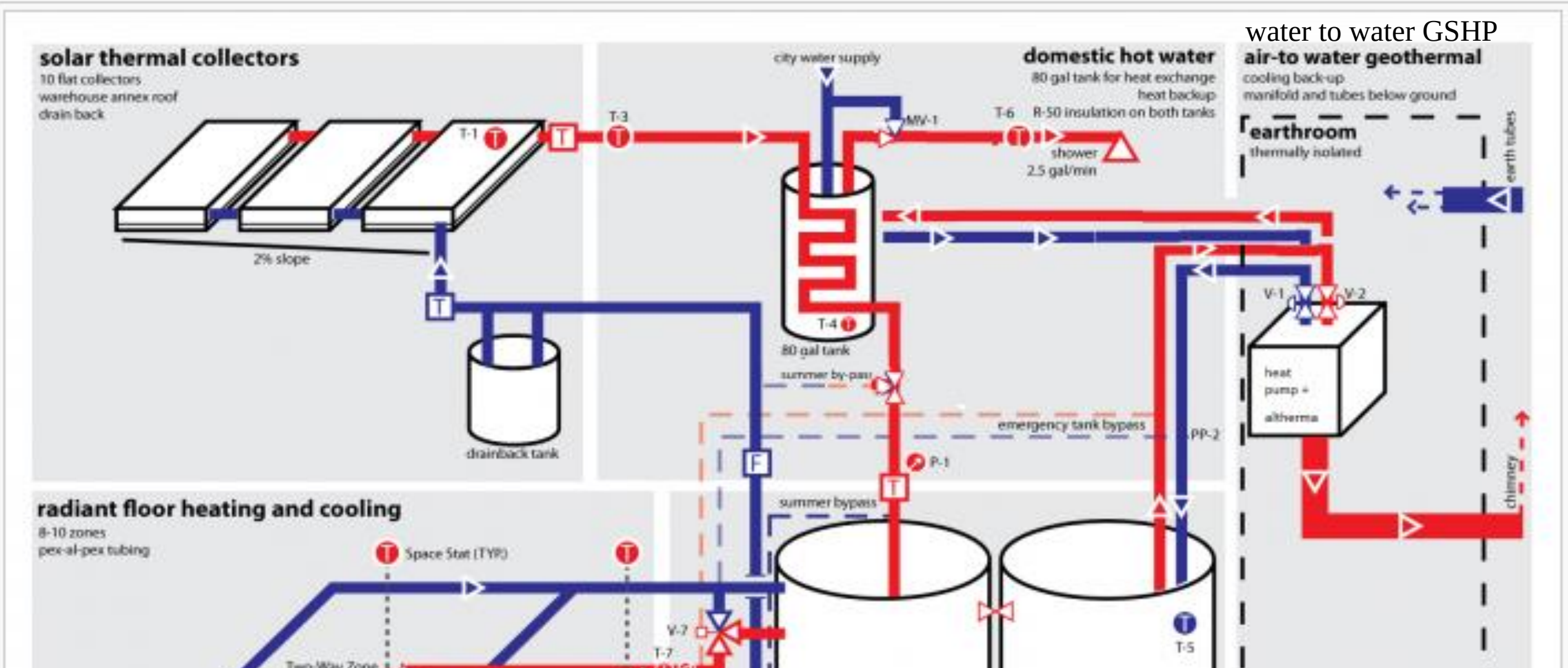

Solar Thermal Energy Storage Tank

- Ideally, the thermal energy storage system will use separate hot and cold water storage with an underground concrete cistern providing natural cooling at about 55-60°F.
- The square, rectangular, or cylindrical thermal energy storage tanks will be super-insulated (R-150) and a vapor barrier (liner) utilized in order to prevent leakage and minimize heat loss. Dead air space between foam layers, similar to that between panes in high performance windows, may be utilized to minimize heat loss.
- The cold water tank will be comprised of an uninsulated underground concrete cistern that will also serve as an emergency source of potable water.
- The size of the solar thermal panels and the energy storage tank will be determined from the peak heating capacity of the structure in conjunction with climate data and weather patterns of the location, target temperature, and heat loss.

Thermal Energy Storage System Calculations

- Typically, for meeting the DHW and space heating needs of a structure with a 17k Btu/hr. peak heating capacity (during the winter season) would require nine 4’x10’ solar thermal panels (200 Btu/ft^2/hr. for six sun hr./day equals 800-1200 Btu/day/ft^2).
- During the summer and early fall, the solar thermal collector system would heat the water in the solar thermal energy storage tank in preparation for the heating season.
- For the Boise, ID location in which there are 5,861 annual heating degree days, a few 4,000-5,000 gal. thermal energy tanks would probably be sufficient. Between 40-160°F, a 4,000 gal. tank would hold over 3.84 MMBtu, at 5,000 gal. it would hold over 4.8 MMBtu, enough to heat the structure for about 10-12 winter days at peak heating capacity with no additional charging.
- In order to optimize energy efficiency, the target temperature of the storage tanks can be regulated to accommodate ΔT of radiant floor heating, local weather patterns and climate data, and rate of heat loss. The return water can be mixed with the storage water to lower entering water temperature.

Heating & Cooling Degree Days

- Heating degree day (HDD) is a measurement designed to reflect the demand for energy needed to heat a building. It is derived from measurements of outside air temperature.
- The heating requirements for a given structure at a specific location are considered to be directly proportional to the number of HDD at that location.
- A similar measurement, cooling degree day (CDD), reflects the amount of energy used to cool a home or business.
- There are 754 annual CDD for Boise, ID. Using cool evening/morning air flush for a peak cooling capacity of about 1 ton would almost eliminate the need for additional cooling of the ZNE-PHMH.

Base Temperature

- Heating degree days are defined relative to a base temperature—the outside temperature above which a building needs no heating.
- The most appropriate base temperature for any particular building depends on the temperature that the building is heated to, and the nature of the building (including the heat-generating occupants and equipment within it).
- The base temperature is usually an indoor temperature of 18°C or 19°C (~65°F) which is adequate for human comfort (internal gains increase this temperature by about 1 to 2°C).

Geo-Solar-ERV Integrated HVAC System

- The integrated water to water GSHP with COP 7 and 97% efficient ERV and fan-coils will provide unprecedented energy efficiency when integrated with the solar thermal energy storage and solar PV DC power system.
- When cloudy days affect the performance of the solar thermal collectors, the GSHP and ERV will fill the gap. A ground to air heat exchanger will be used in conjunction with the ERV.
- Web-based programmable automated controls and energy management will provide state-of-the-art user-friendly human to machine interfacing (HMI) for homeowners and HVAC technicians.
- Integrated controls will provide unprecedented energy efficiency using solar-geo energy and by minimizing ΔT via radiant heating and cooling and capitalizing on thermal mass of ICF/concrete structures and 100% water used in hydronic radiant and over-sized fan-coil/air-handler heating and cooling systems.

High Thermal Mass & Energy Storage 50% Reduction in Solar Collectors

- High thermal mass construction such as ICF/concrete structures (external and internal walls, floors and vaulted ceiling), radiant heating and cooling systems that minimize ΔT, a super-insulated seasonal energy storage tank, ground to air heat exchanger integrated with 97% efficient ERV/HRV including oversized fan coils and cool air flush, a hybrid electric thermal storage system using a water to water GSHP with a COP over 7.0, and programmable automated controls can conserve up to 50% of the energy required to heat the structure.
- This could reduce the size of the solar thermal collector system by 50% without affecting the performance of the space heating or DHW systems.

Heat Capacity & Thermal Conductivity

- Since pozzolans (fly ash, slag, etc.) have higher heat capacities and decreased thermal conductivity, they offer the following advantages over ordinary Portland cement concrete:
  - Increased resistance to heat/fire
  - Increased ability to store thermal energy
  - Slower release of that thermal energy for heating structures which enhances energy efficiency
- This makes pozzolanic and Portland cement concrete blends strategically appealing for use with concrete structures, particularly in conjunction with hydronic-radiant heating and cooling systems, allowing for conservation of up to 40% of the energy required for heating and cooling a concrete structure.

Modern Hydronic Technology

- Nearly all geothermal heat pump systems can be enhanced through modern hydronic technology. Techniques such as:
  - state-of-the-art geoexchange loop fields (including hydrated sand baths)
  - hydraulic separation & manifold based distribution systems
  - zoning, synchronization, and cool air flush during summer months
  - thermal energy storage systems (thermal battery)
  - variable-speed ECM circulators and consolidation of supply and distribution loops
  - radiant floor heating and cooling & 2nd stage fan-coil/air handler subsystems
  - integration with solar thermal collectors, ERVs, and ground to air heat exchangers
  - using all water for solar thermal drainback, thermal battery & GSHP systems
  - web-based programmable controls for integrated systems

can all be successfully applied in combination with geothermal or ground source heat pumps (GSHPs) to provide unprecedented energy efficiencies for integrated systems.

Providing Domestic Hot Water Coils & Supplementing GSHPs via Solar Energy

- Due to heat loss of seasonal thermal energy storage systems, the most efficient use of geo-solar thermal energy is achieved through direct use.
- Hence, heating domestic hot water (DHW) and supplementing the supply side of a water to water GSHP in the heating mode are the most efficient use of solar thermal resources and should be priorities for designing integrated systems.
- 100% water drain-back systems with minimal use of coils are compatible with this approach to optimizing efficiency of geo-solar thermal energy.

Solar PV vs. Solar Thermal

- Though solar thermal systems can achieve energy conversion efficiencies of 80-90%, they are substantially more expensive to install and require considerably more maintenance in comparison with solar PV systems.
- Solar PV panels have decreased in price by 80% over the last five years and are expected to decrease by another 30% by 2016.
- Solar PV are also less costly to install and require much less maintenance in comparison with solar thermal systems.
- Recently, government grant programs have focused almost entirely on improving efficiency and reducing soft costs of implementing solar PV technology.

Comparing Solar Thermal & PV Systems

- Compared to a PV system, a solar thermal system has several disadvantages:
- Unlike a PV system, most solar thermal systems have moving parts (pumps and solenoid valves).
- In freezing climates, solar thermal systems are sometimes subject to freeze damage.
- Solar thermal systems require regular maintenance, including antifreeze replacement.
- Unlike owners of a grid-connected PV system, who can be credited for their excess electricity production during the summer, owners of a solar thermal system can't sell the excess summer production of their hot water systems.

Comparing Solar Thermal & PV Systems cont.

- While a pole-mounted PV array can include a tracking mechanism to follow the sun's path across the sky, it's virtually impossible to install solar thermal collectors on a tracker.
- On average, PV systems probably last longer than solar thermal systems. This is due largely to lower maintenance requirements.
- There are far more stories of troublesome solar thermal systems than there are stories of troublesome PV systems. Solar thermal systems sometimes develop air bubbles that interfere with the circulation of fluid, suffer from leaking pipes, or experience problems from summertime overheating. PV systems, which suffer none of these headaches, look attractive in comparison.

Integration of Solar PV & Solar Thermal

- Solar PV systems can range from 20-45% conversion efficiency.
- The majority of solar PV technologies range from 15-22% conversion efficiency.
- This reveals that 55-85% of the energy produced by solar PV panels is thermal energy.
- As the temperature rises, solar PV conversion efficiency drops due to resistance which results in production of thermal energy.
- Hence, there is potential to simultaneously maintain solar PV conversion efficiency while capturing the associated thermal energy.

State-of-the-Art W2W GSHP Technology

- With water to water (W2W) ground source heat pump (GSHP) technology advances using electrically commutated motors (ECM) and 100% variable operation, coefficients of performance (COP) can now range as high as 7.0 for properly designed systems powered primarily by solar PV and associated net-metering systems.
- By strategically installing geoexchanger field loops around the footings of a basement for a super-insulated passive house (which reduces peak heating and cooling loads by over 95% for ICF structures), costs of GSHP installations can be reduced by up to 50%.

Solar PV & DC Powered GSHP Systems

- One of the advantages of powering GSHP systems with solar power is eliminating the 30% power losses for converting DC to AC and then back to DC.
- During the day when the PV system is producing DC power, this power source can be utilized directly by the GSHP and other DC powered devices throughout a structure such as a passive house.

Strategic Battery Storage Design

- When a DC battery storage system is included with a solar PV system, optimal energy efficiency can be attained.
- Since large battery systems are expensive, especially for lithium ion technology similar to that used in electrical vehicles, battery systems can be strategically designed to fill the gap for provision of DC power during evenings when the sun is not shining, then be re-charged during the day.

Solar Photovoltaic (PV) Panels

- These direct current (DC) electricity-producing panels have been available for several years and with the introduction of Feed in Tariffs are a very cost effective way of producing electricity and generating revenue.
- One little-mentioned drawback with PV is that as the surface temperature of the panel rises, the output drops.

Solar Thermal Collectors

- Traditional solar thermal installations collect the sun's heat and convert this into hot water, typically meeting a property's summer hot water requirements.
- A major drawback is that in times of little or no sun there is little or no hot water.

Heat Pumps

- Heat pump technology has been available for many years and installations of both ground-source and air-source systems are meeting heating demands all over the world.
- However, whilst these devices are potential greener than burning fossil fuels, they do still use large amounts of electricity.

The Hybrid Solar Solution

- The Hybrid Solar Solution combines all three of the above technologies in such a way that the aggregate system outputs are far greater than those produced by the components individually.

The Hybrid Solar Solution cont.

- PV, as already mentioned, has a linear drop-off in efficiency as the surface temperature of the panel rises. Given that PV panels are typically black and mounted in such a way as to get maximum exposure to the sun, this rise in panel temperature is inevitable.
- PV panels typically lose efficiency of up to 0.5% per degree rise in panel temperature.

Photovoltaic Thermal (PV-T) Collector

- However the Hybrid Solar Solution combines both the PV and Thermal elements onto a single panel - a photovoltaic thermal (or PV-T) collector.
- This has two main advantages; firstly, by drawing heat away from the panel the electrical output is maintained at a higher level for a longer period, and secondly, with the PV and Thermal elements combined on a single panel less roof area is required, allowing for greater outputs on equivalent roof space.

Integrating Solar Thermal & GSHP

- The output of solar thermal is dependent on sunlight so for half the day and most of the winter a solar thermal collector operates very inefficiently and the heat collected is often at a much lower temperature than that required for use in a house.
- With the integration of the heat pump, the output of the thermal collector is no longer directly related to the intensity of the sun and therefore a constant output temperature can be achieved irrespective of solar input.

Advantages of Integration

- Heat can be collected from the panel at night as the surface of the panel will act as a thermal absorber rather than solar collector
- The temperature of water in the house can be set and achieved irrespective of levels of irradiance (sunshine).

Increasing COP of Water to Water GSHP

- COP is a simple calculation of electrical energy input versus thermal energy output. However, the COP of a heat pump changes across the seasons as the result of the seasonal drop in source temperature. In other words, as the input temperature of the source reduces (colder ambient ground or air conditions), and the difference between latent heat input and upgraded heat output rises, so the COP falls.
- Air-source heat pumps are most susceptible to this; when the ambient temperature drops to below freezing the COP will drop off dramatically. Ground source heat pumps are more stable and do not have such a wide spread of COP due to the relative constancy of the energy source.

Hybrid Solar Thermal & GSHP Solution

- The Hybrid Solar Solution maximizes the advantages of air-source (namely low cost) without the downside of extremely inefficient performance in freezing conditions.
- The Hybrid Solar Solution collects its heat from the PV-T panels, so even in winter, under direct sunlight, the panels will be providing an input temperature far greater than the ambient air temperature, and generally well above ground-source, particularly at the end of a harsh heating season when the ground may well have frozen.
- This means that the operating COP of the Hybrid Solution surpasses those of other domestic heat pump technologies.

Photovoltaic Thermal Hybrid Solar Collectors

- Sometimes known as **hybrid PV/T systems** or **PVT**, are systems that convert solar radiation into thermal and electrical energy. These systems combine a photovoltaic cell, which converts electromagnetic radiation (photons) into electricity, with a solar thermal collector, which captures the remaining energy and removes waste heat from the PV module.
- The capture of both electricity and heat allow these devices to have higher exergy and thus be more overall energy efficient than solar photovoltaic (PV) or solar thermal alone. A significant amount of research has gone into developing PVT technology since the 1970s.

Hybrid PVT Systems

- Photovoltaic cells suffer from a drop in efficiency with the rise in temperature due to increased resistance. Such systems can be engineered to carry heat away from the PV cells thereby cooling the cells and thus improving their efficiency by lowering resistance. Although this is an effective method, it causes the thermal component to under-perform compared to a solar thermal collector. Recent research showed that photovoltaic materials with low temperature coefficients such as amorphous silicon (a-Si:H) PV allow the PVT to be operated at high temperatures, creating a more symbiotic PVT system. This advantage can be tuned by controlling the dispatch strategy of thermal annealing cycles.

PV/T Liquid Collector

- The basic water-cooled design uses conductive-metal piping or plates attached to the back of a PV module. The fluid flow arrangement through the cooling element will determine which systems the panels are most suited to.
- In a standard fluid based system, a working fluid, typically water, glycol or mineral oil is then piped through these pipes or plate chillers. The heat from the PV cells are conducted through the metal and absorbed by the working fluid (presuming that the working fluid is cooler than the operating temperature of the cells).

Open & Closed PV/T Liquid Systems

- In closed-loop systems this heat is either exhausted (to cool it), or transferred at a heat exchanger, where it flows to its application.
- In open-loop systems, this heat is used, or exhausted before the fluid returns to the PV cells. It is also possible to disperse nanoparticles in the liquid to create a liquid filter for PV/T applications. The basic advantage of this type of split configuration is that the thermal collector and the photovoltaic collector can operate at different temperatures.

Drain Back Solar Thermal Collector Systems

- Drain back systems provide an 18% increase in energy efficiency compared to closed systems using glycol.
- Life cycle is increased by 33% vs. a glycol system.
- System is substantially simplified vs. a closed pressurized system:
  - No expansion tank required
  - No pressurized tank required
  - No check valve required
  - No air valve required
  - No pressure release valve required
  - No heat exchanger required
  - No heat dump equipment required
- Labor and materials for installation of a drain back system are less expensive.
- Stainless steel or brass circulators must be utilized in the solar loop since air can cause oxidation and lead to rusting of cast iron circulators for open systems.

Integration of ERV, Ground to Air Heat Exchanger, and GSHP

Figure 6-23

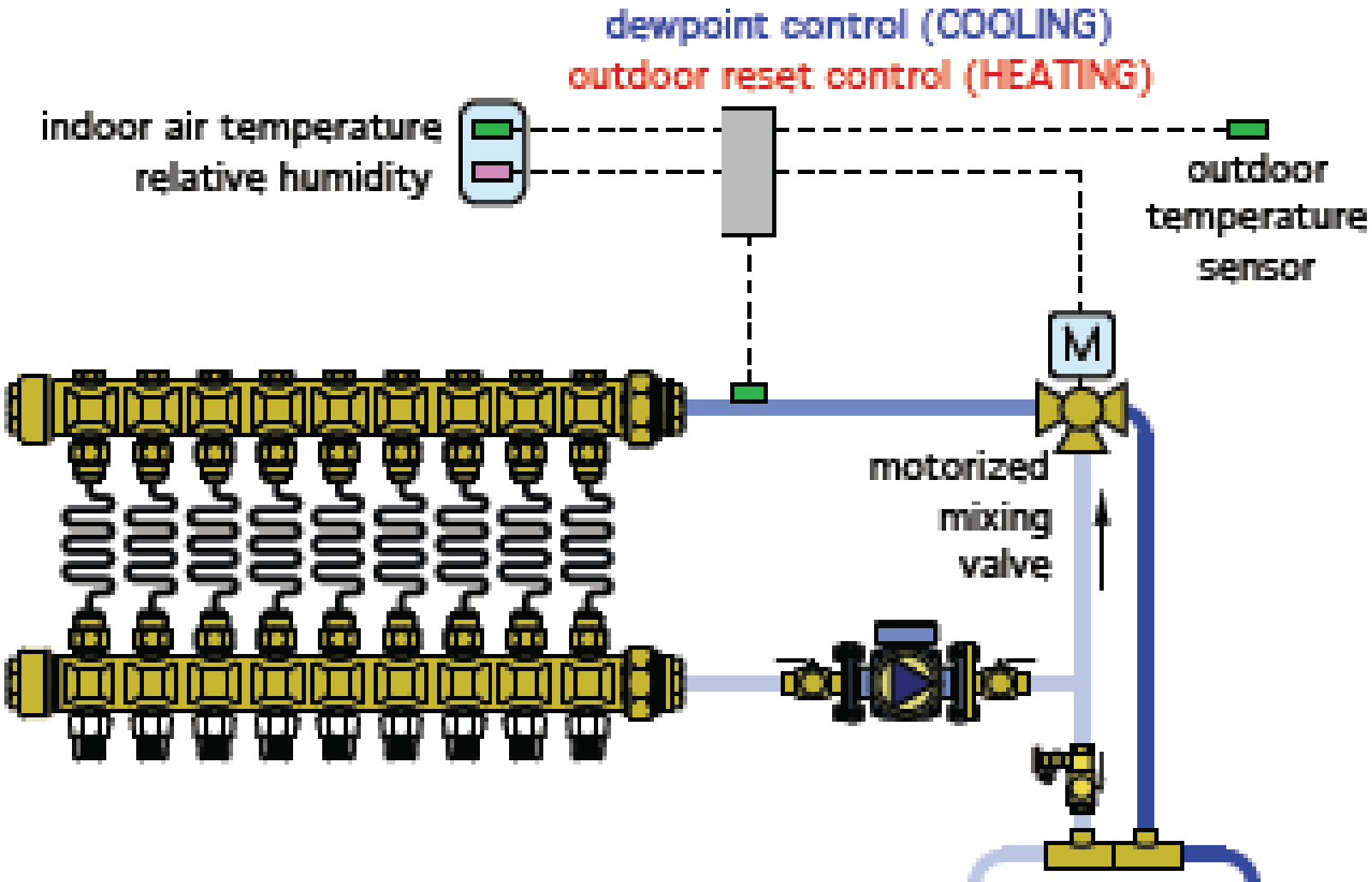

Geothermal Loop vs. Ground to Air Heat Exchangers

- Geothermal loops require pumps and coils vs. the passive approach of using ground to air heat exchangers on the air intake side of an ERV.
- When a constant flow of air is being utilized via an ECM variable ERV, there is little concern for mold or bacteria build-up in a ground to air heat exchanger and operational costs are minimal.
- Ground to air heat exchangers can reduce heating and cooling loads by up to 30%.

ERV & Ground to Air Heat Exchanger

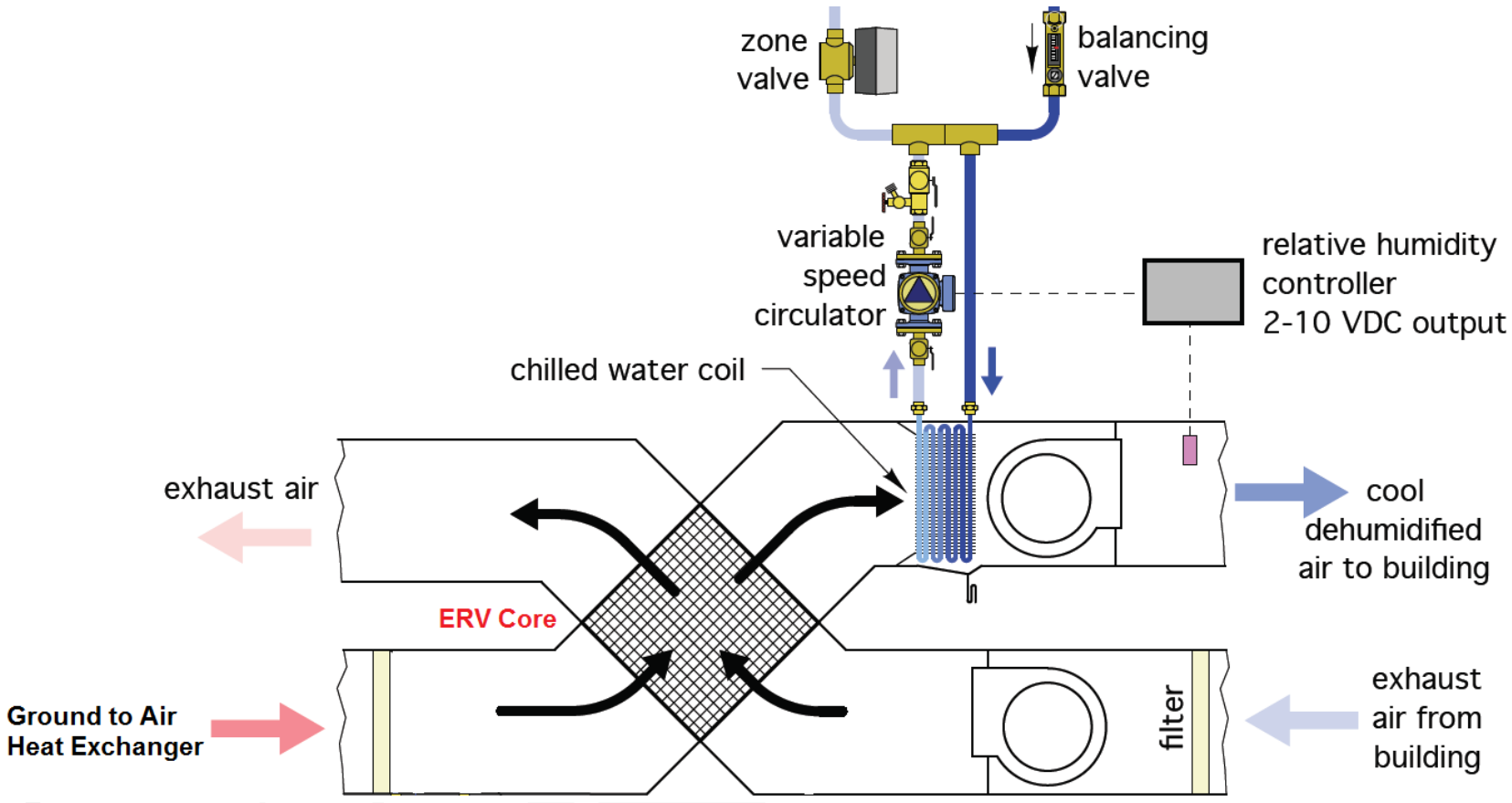

Solar Thermal Collector Brazen Plate Heat Exchanger for Water to Water GSHP

Figure 7-2

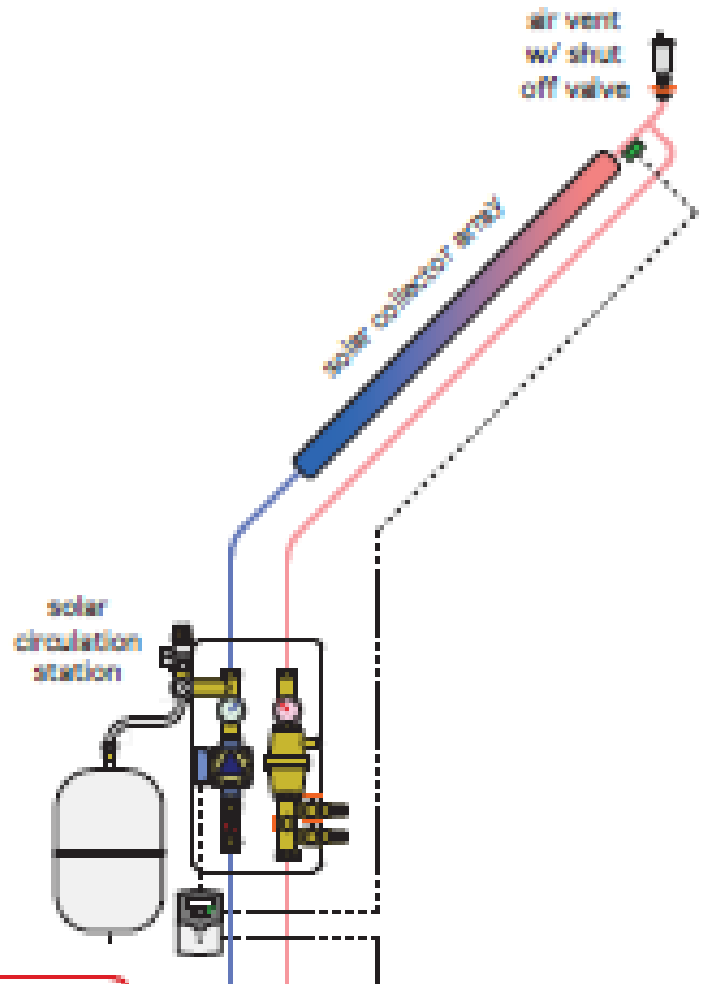

Caleffi Idronics - Geo-Hydronic Systems, vol. 9, p.53

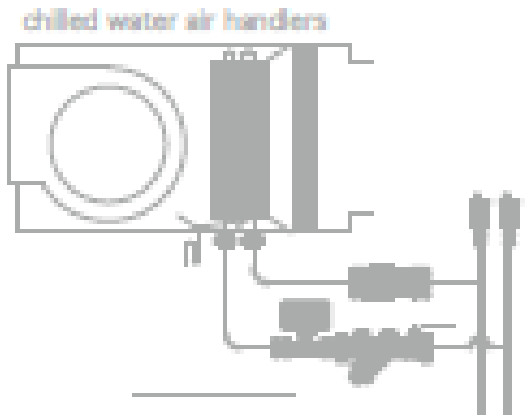

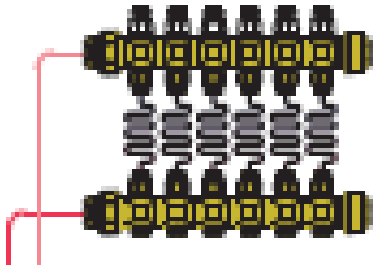

Solar Thermal Collector Brazen Plate Heat Exchanger for Water to Water GSHP cont.

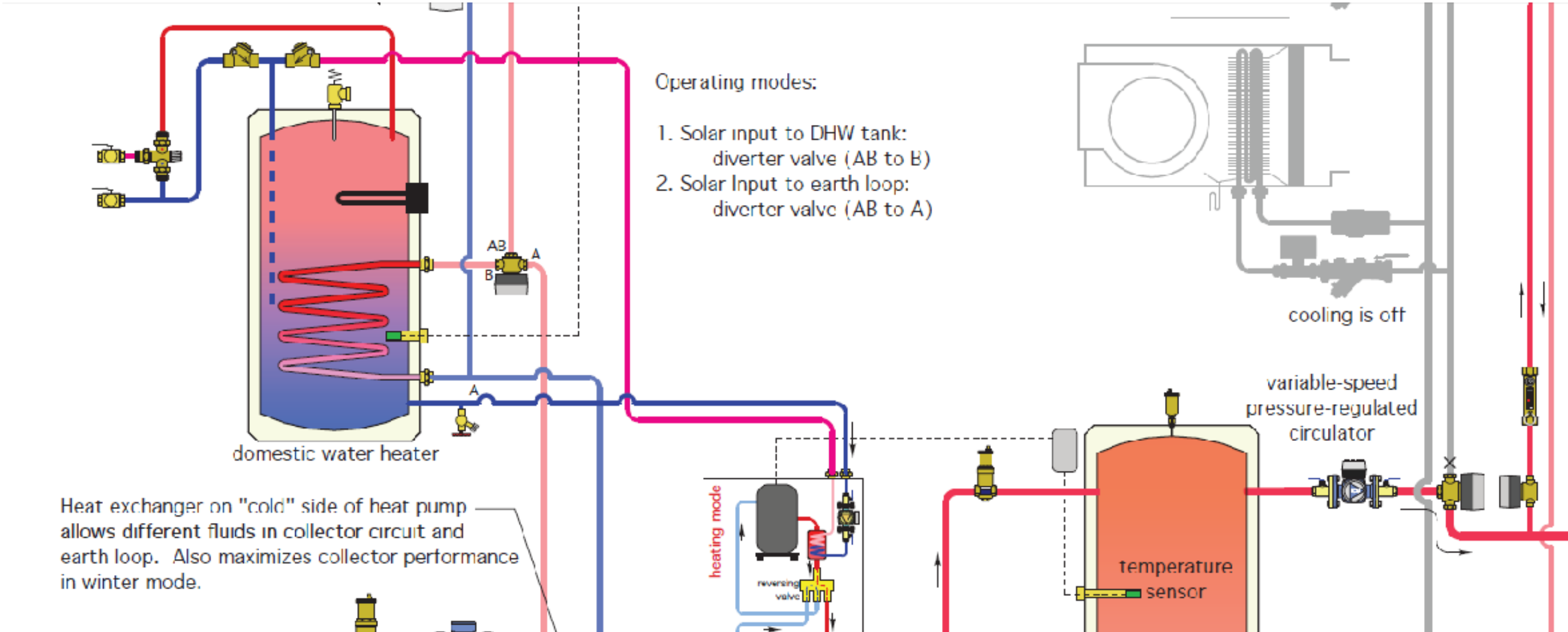

Optimizing Energy Efficiency

- For an all water solar thermal and integrated water to water GSHP system, there is no concern for separation of fluids (glycol and water).
- Thus, brazen plate heat exchangers are not necessary and the use of coils can be minimized which reduces installation costs and head loss for circulation pumps.
- Solar thermal water can still be inserted directly into the GSHP via a three way valve, and/or merely circulated into a well insulated buffer tank/thermal battery system and then invest in additional solar thermal panels.
- A variable ECM GSHP with a brazen plate heat exchanger and variable ECM circulator pump can be utilized to optimize energy efficiency for the geothermal loops.

ECM – Brushless DC Motors

- Although direct current motors have been in use for over a century, their use is low compared with the use of alternating current induction motors.
- The biggest single drawback of conventional DC motors is the wear on the brushes.
- Brushless DC motors (ECM) do not have this disadvantage.

ECM Technology

- In ECM motors, the rotor has permanent magnets, and the stator has electrically excited windings. These windings generate the magnetic fields that push and pull the permanent magnets on the rotor. In order for the rotor to turn, the windings on the stator must reverse polarity continually.
- A brushless commutator placed on one end of the rotor provides the signal to the stator windings to reverse polarity. An integrated circuit times the switching of the electric currents to the stator. Frequently, a programmable chip is used with the brushless DC motors to provide multispeed capabilities.
- Individual temperature control systems are designed to move with workstations and are thus adaptable to office rearrangement.

Brushless DC Permanent Magnet Design

- ECM (Electronically Commutated Motor) technology is based on a brushless DC permanent magnet design that is inherently more efficient than the shaded-pole and permanent-split-capacitor (PSC) motors commonly found in air handlers, furnaces, heat pumps, air conditioners and refrigeration applications throughout the HVACR industry.
- By combining electronic controls with brushless DC motors, ECM's can maintain efficiency across a wide range of operating speeds. Plus, the electronic controls make the ECM programmable, allowing for advanced characteristics that are impossible to create using conventional motor technologies.

ECM - Programmable Motor

Motor

Permanent Magnet

ECM Microprocessor & Electronic Controls

- Early HVAC literature listed these motors as **ICM (Integrated Control** Motor), meaning that a control was integrated or used in conjunction with a motor to control its operation. This was later changed to **ECM (Electronically Commutated Motor)** as they are typically referred to today.
- The definition of commutate is to reverse the direction of an alternating electric current (the means by which all electric motors rotate). In an ECM this process is controlled electronically by a microprocessor and electronic controls, which provides the ability to program and control the speed and/or torque of the motor.

Motor Control & Motor (Motor Module)

- The GE ECM™ motor, currently used by most residential HVAC systems is a brushless DC, three-phase motor with a permanent magnet rotor.
- Motor phases are sequentially energized by the electronic control, powered from a single-phase supply.
- These motors are actually made of two components, a motor control (control module) and a motor, sometimes called a motor module.

ECM - Motor Control & 3 Phase Motor

- *The motor control* is the brains of the device, where single phase (10) 120 or 240 VAC 60 cycle (Hertz/frequency) power is connected.
- The control then converts AC power to DC power to operate the internal electronics, thus the name DC motor.
- The microprocessor in the motor control is programmed to then convert DC power (by means of electronic controls) to a three phase (30) signal to drive the motor, thus the name Three Phase Motor.
- It also has the added ability to control the frequency (which controls the speed in revolutions per minute) and the amount of torque (current/power) it delivers to the motor.

100% Variable Speed Operation

- The motor is essentially a three phase motor with a permanent magnet rotor. The permanent magnet rotor contributes to the electrical efficiency of the ECM and also to its sensor-less ability to control the rpm (revolutions per minute) and commutation (when to alternate the cycle).
- Typical DC motors require brushes to provide the commutation function. This is where the motor gets the name brushless DC motor.
- The benefit of all of this technology is increased electrical efficiency and the ability to program more precise operation of the motor, over a wide range of HVAC system performance needs, to enhance consumer comfort.

Energy Consumption Reduced by 40-85%

- Variable flow-rate reduces energy consumption.
- By reducing flow-rate ECM circulation pumps can increase the temperature difference between water leaving and entering the integrated solar thermal-GSHP/buffer tank system.
- In many cases when variable ECM technology is included in water to water GSHPs, the need for a buffer tank can be eliminated.
- EMC circulation pumps compensate for the fact that conventional circulation pumps are significantly oversized.
- Advanced ECM circulators automatically determine the lowest possible operating efficiency point to meet changing system demands.
- ECM pumps and fan-coil/air handler motors allow for reducing energy consumption of HVAC systems by 40-85% according to case studies.

40-85% Reduction in Energy Consumption

- Out of the box, an ECM circulator will yield the same flow rate while consuming 50% less energy over a traditional induction-type circulator.
- Some ECM circulators, such as the Grundfos ALPHA and Taco HE-2, use smart technology and integrated logic boards to “learn” the system’s usage patterns in order to boost the standard 50% energy savings into the 70-85% range.
- As the valves in the different sections open or close with rising or falling demand, these smart circulator pumps automatically ramp up or down to meet the load.
- Innovative system designs may allow for using only one ECM circulator pump for the supply and distribution loops of the HVAC system provided head loss can be maintained below ~12 ft.

Wholesale Distributors of Grundfos

- Grundfos ALPHA ECM circulation pumps can be economically purchased online through a variety of retail and wholesale distributors:
  - Global Industrial
  - Locke Well & Pump Co.
  - eBay
  - eBay - pextubing
  - Pump Products
  - www.pexsupply.com
- Conventional circulation pumps, which are often 90% less expensive and provide similar energy consumption for passive house and geothermal applications, are often cost effective alternatives.

Grundfos vs. Taco Models

- HVAC geothermal systems can be designed with 6.5 GPM flow and up to 14.5 ft. head loss (by running fan coils in parallel or in separate loops) in order to minimize cost of circulation pumps purchased online from www.pexsupply.com:
  - Taco 0015-MSF2-IFC cast iron 3 speed with internal flow check - 1/20 HP, operates from 0-18 GPM with up to 21 ft. head loss. Purchase price $82.
  - Grundfos UPS15-58C cast iron 3 speed – 1/25 HP operates from 10-17 GPM with up to 19.5 ft. head loss. Purchase price $94.75. $14.60 annual energy savings.
  - Taco HEC-2 cast iron variable speed ECM with internal check valve – operates from 0-15.5 GPM and 0-15 ft. head loss. Purchase price $175. $56.72 annual savings.
  - Grundfos ALPHA 15-55 F 165 cast iron ECM variable speed - 1/15 HP operates from 0-21.5 GPM and 0-19 ft. head loss. Purchase price $160 (purchasing groups of 3). $55.07 annual energy savings.

ECM Variable Speed Circulation Pumps

- At up to an 85% increase in energy efficiency over the Taco 015 model, the ROI for the Taco Bumble Bee (Model HEC-2) or Grundfos ALPHA 15-55 ECM variable speed pump models would be less than two years for variable speed applications.
- If supply and distribution loops are designed so that constant flow and head loss is achieved, then there is no substantial advantage to investing in variable speed pumps.
- However, in order to benefit from ECM circulator pump and programmable controls technology, one must usually purchase a variable speed model.

Grundfos Performance/Cost Comparison

	Taco 0015-MSF2-1IFC	Grundfos ALPHA15-55F	Grundfos UPS15-58FC
SYSTEM:	Closed	Closed	Closed
Pump Body:	Cast Iron	Cast Iron	Cast Iron
Max Flow (GPM):	18.00	21.50	17.00
Max Head:	21.00	17.00	19.50
Max Working Pressure (PSI):	125	150	145
Max Watts:	112.70	45.00	87.00
HP:	1/20	1/15	1/25
Port to Port Length:	6-1/2"	6-1/2"	6-1/2"
Flange Size/Connection Type:	2-Bolt Flange-R	2-Bolt Flange GF 15/26	2-Bolt Flange GF 15/26
Est. Annual Energy Costs[1]:	$64.02	$8.95	$49.42

[1]Energy costs calculated on pump operating 13 hours a day, 230 days a year. Dollar amount based on $0.19 kWh.

UPS 15-58 FC Performance Curves

UPS 15-58 FC/FRC

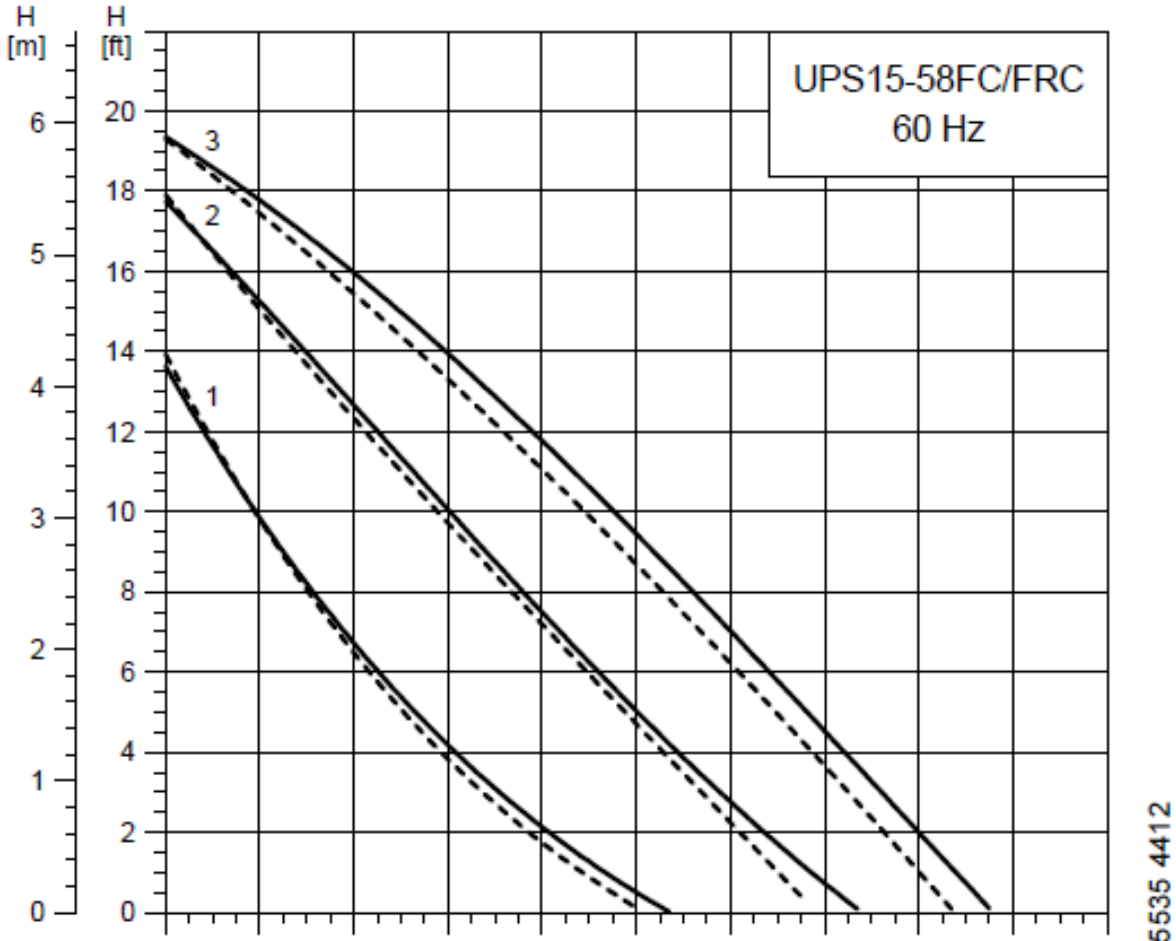

Flow range:	0-17 gpm (0-3.9 m^3h)
Head range:	0-19.5 ft (0-5.9 m)
Motors:	2-pole, single-phase
Max. liquid temperature:	230 °F (110 °C)
Min. liquid temperature:	36 °F (2 °C)
Max. system pressure:	145 psi (10 bar)

Model	Speed	Volts	Amps	Watts	Hp	Capacitor
UPS 15-58 FC/ FRC	3	115	0.75	87	1/25	10µF/180 V
	2		0.66	80	1/25	
	1		0.55	60	1/25	

———	Without check valve
- - - -	With check valve

Grundfos Alpha 15-55 Performance Curves

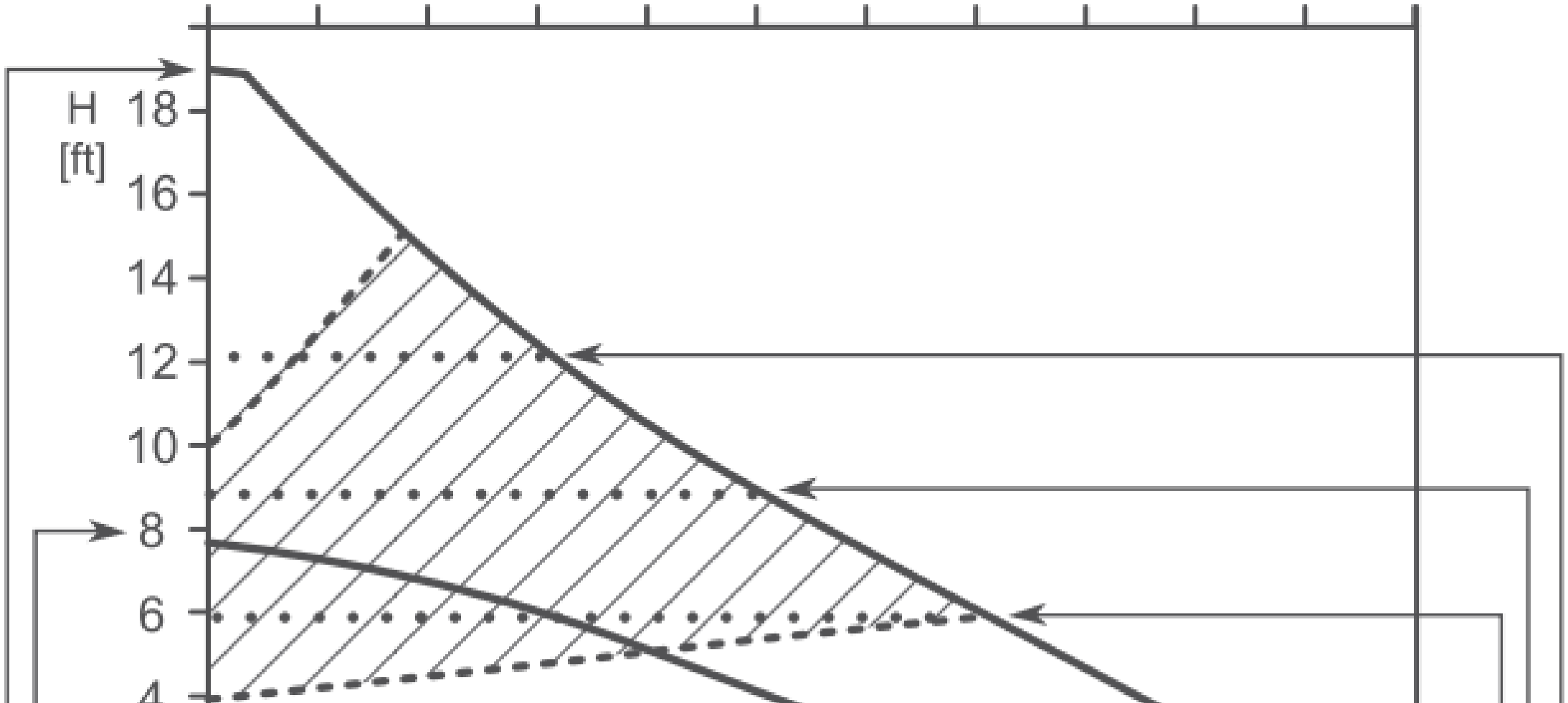

Taco 0015 Product Information

The Taco 0015 3-Speed Pump is specifically designed to provide dial-in precision to meet the requirements of any hydronic heating system, including radiant and higher head systems.

In radiant applications, its 3-Speed switching capability provides fine tuning control to match a wide combination of tube diameters and length of runs.

The 0015 3-Speed Pump is a direct replacement for the Grundfos UPS 15-58 3-Speed. The 0015 delivers the highest starting torque in its class and a removable, high-flow Integral Flow Check (IFC®) that prevents gravity flow, reduces installation costs and improves pump performance. The stainless steel 0015 is ideal for high performance in domestic hot water applications.

Taco 3 Speed Performance Curves

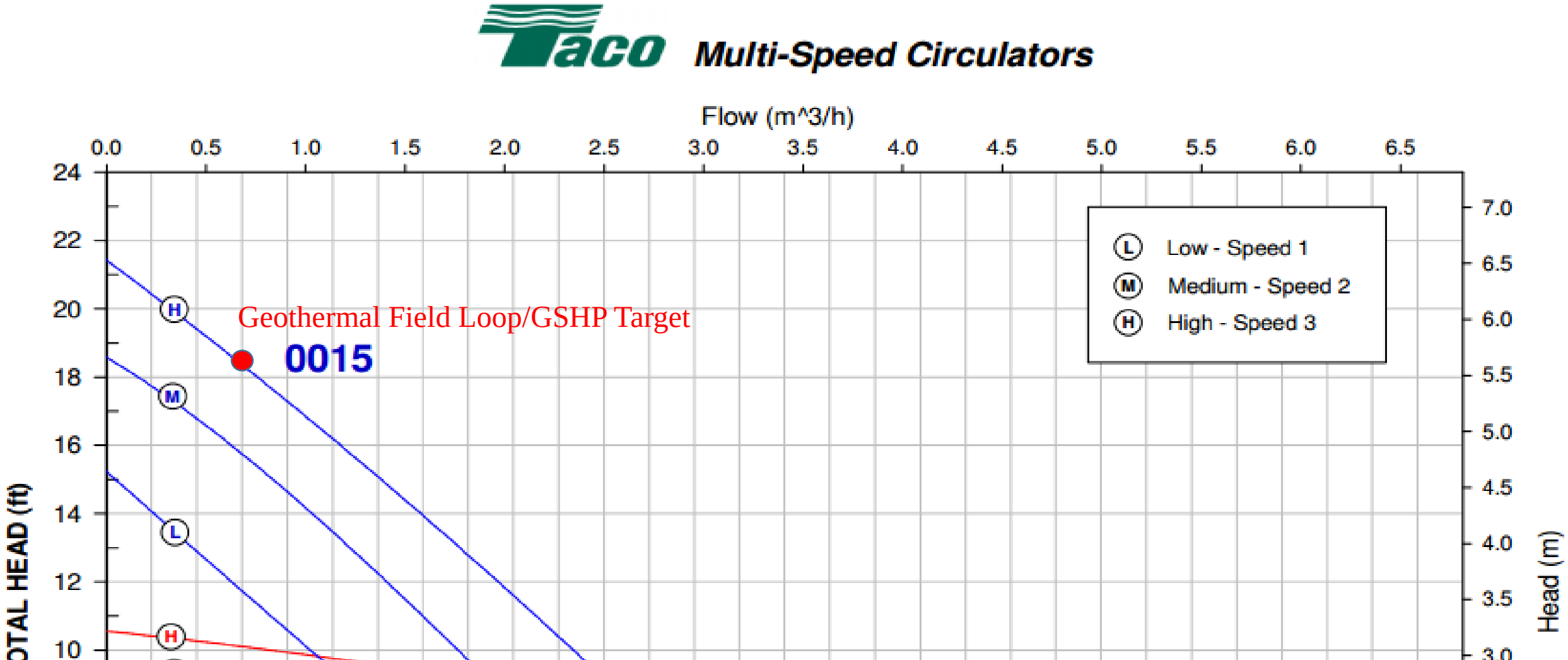

Taco (Bumble Bee) HEC-2 Performance Curves

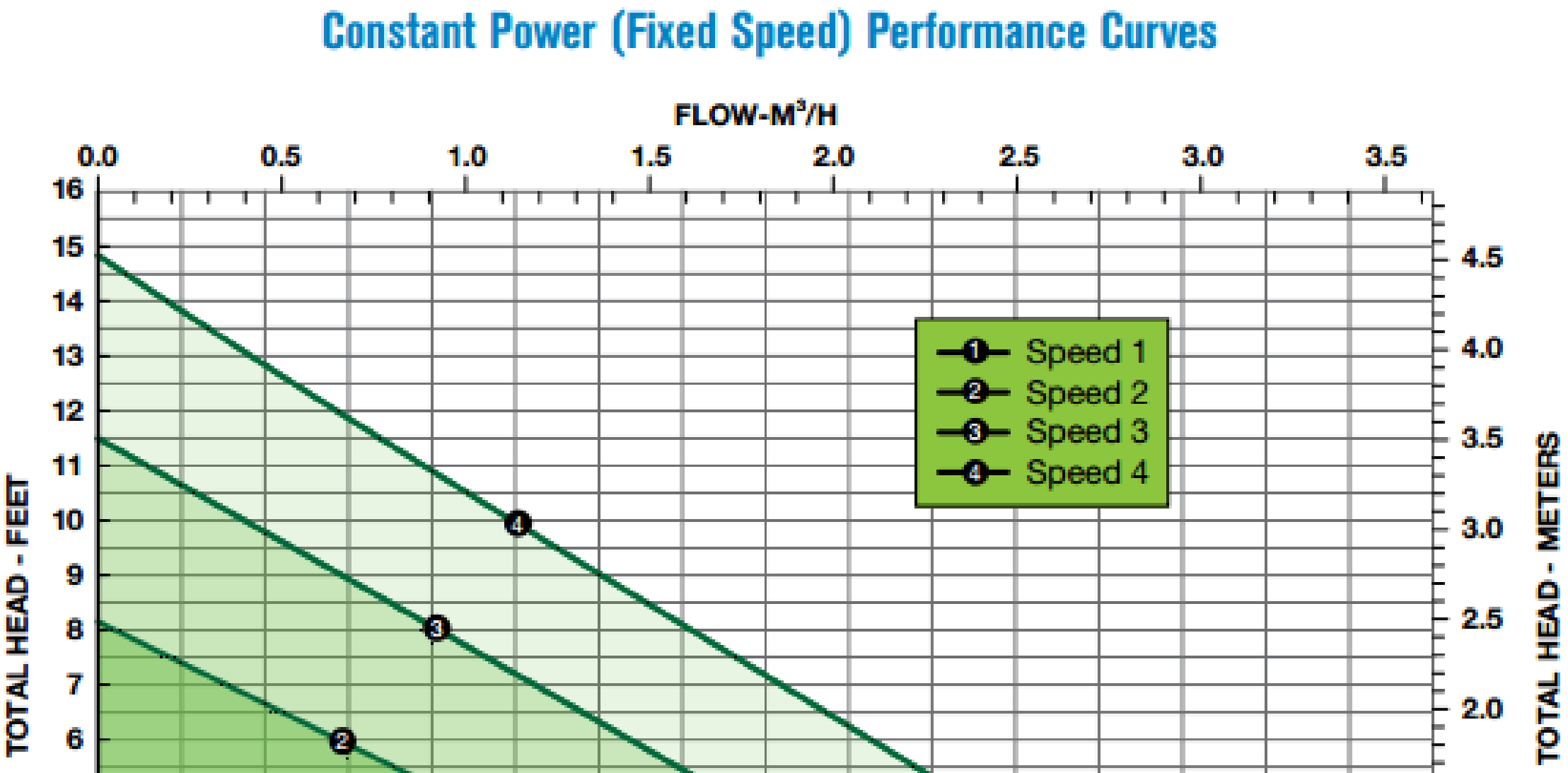

Taco Bumble Bee (HEC-2) Variable Speed ECM

- High efficiency ECM motor uses up to 85% less electricity than a standard circulator, and its out-of-the-box settings and 360° swivel flange makes it a breeze to install.
- Delta-T variable speed technology maximizes the overall efficiency of heating systems.
- Operates in three different modes:
  - CP - Constant Power (Fixed Speed) allows for 4 fixed circulator speeds.
  - SP - Setpoint (Variable Speed) allows for a fixed supply temperature from 65°F to 220°F.
  - dE - Delta-T, Differential Temperature (Variable Speed) allows for a fixed system temperature differential - (ΔT) from 5°F to 50°F. Factory Pre-Set for Delta-T mode @ 20˚F ΔT.

Grundfos Performance/Cost Comparison

	Taco 007-BF5	Grundfos ALPHA15-55SF	Grundfos UPS15-55SFC
SYSTEM:	Open	Open	Open
Pump Body:	Bronze	Stainless Steel	Stainless Steel
Max Flow (GPM):	23.00	21.50	25.00
Max Head:	10.00	17.00	18.00
Max Working Pressure (PSI):	125	150	145
Max Watts:	87.40	45.00	87.00
HP:	1/25	1/15	3/25
Port to Port Length:	6-3/8"	6-1/2"	6-1/2"
Flange Size/Connection Type:	2-Bolt Flange	2-Bolt Flange GF 15/26	2-Bolt Flange*
Est. Annual Energy Costs[1]:	$49.65	$8.95	$49.42

[1]Energy costs calculated on pump operating 13 hours a day, 230 days a year. Dollar amount based on $0.19 kWh.

UPS 15-55 SFC Performance Curves

UPS 15-55 SFC/SUC/TLC

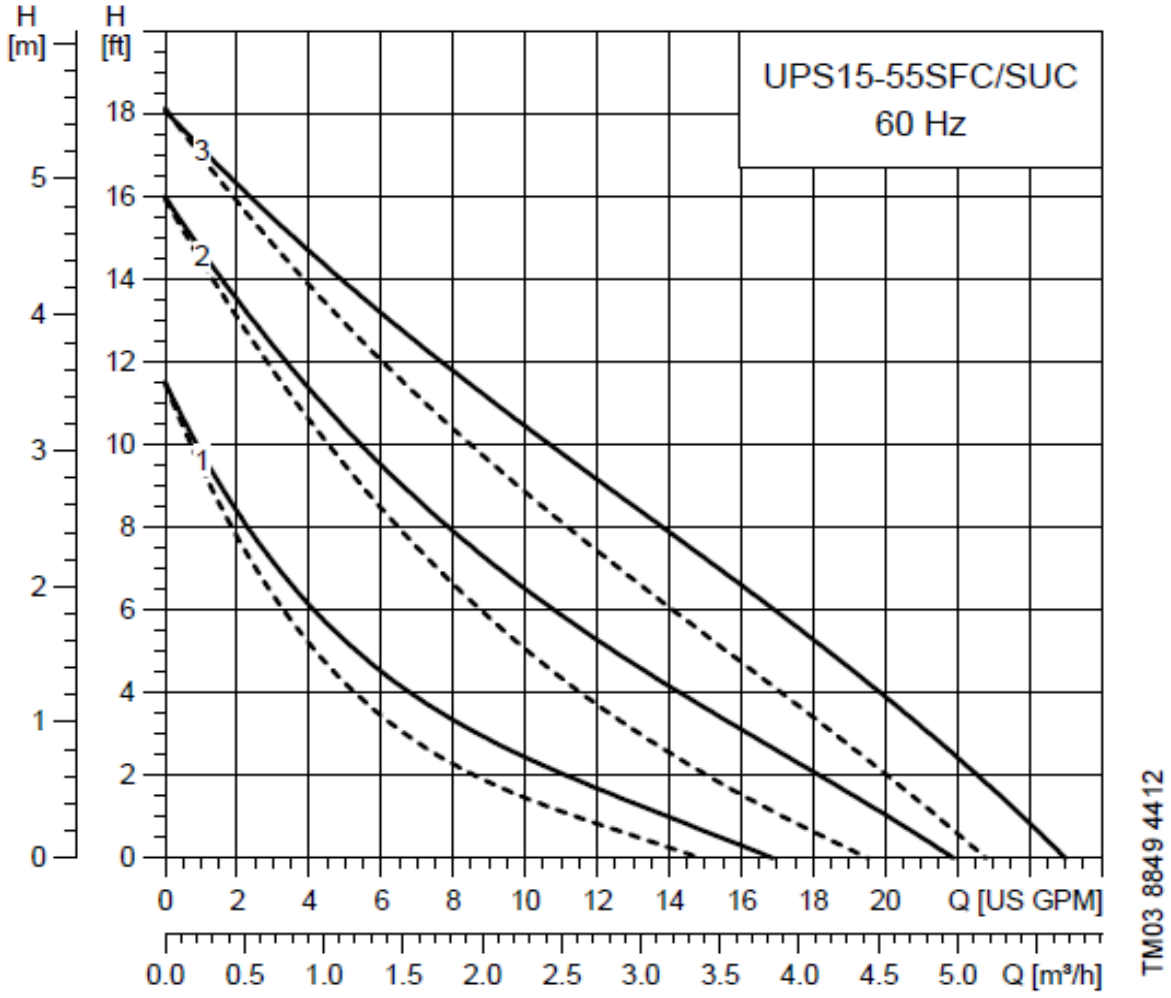

Flow range:	0-25 gpm (0-5.7 m^3h)
Head range:	0-18 ft (0-5.5 m)
Motors:	2-pole, single-phase
Max. liquid temperature:	230 °F (110 °C)
Min. liquid temperature:	36 °F (2 °C)
Max. system pressure:	145 psi (10 bar)

Note: If the UP pump is equipped with a timer, the maximum liquid temperature is 150 °F (66 °C).

Model	Speed	Volts	Amps	Watts	Hp	Capacitor
UPS 15-55 SFC	3	115	0.75	87	0.12	10µF/180 V
	2		0.69	77	0.1	
	1		0.53	58	0.08	
UPS 15-55 SUC	3	115	0.69	87	0.12	
	2		0.66	74	0.1	
	1		0.31	56	0.08	

———	Without check valve
- – – -	With check valve

Grundfos Alpha 15-55 Performance Curves

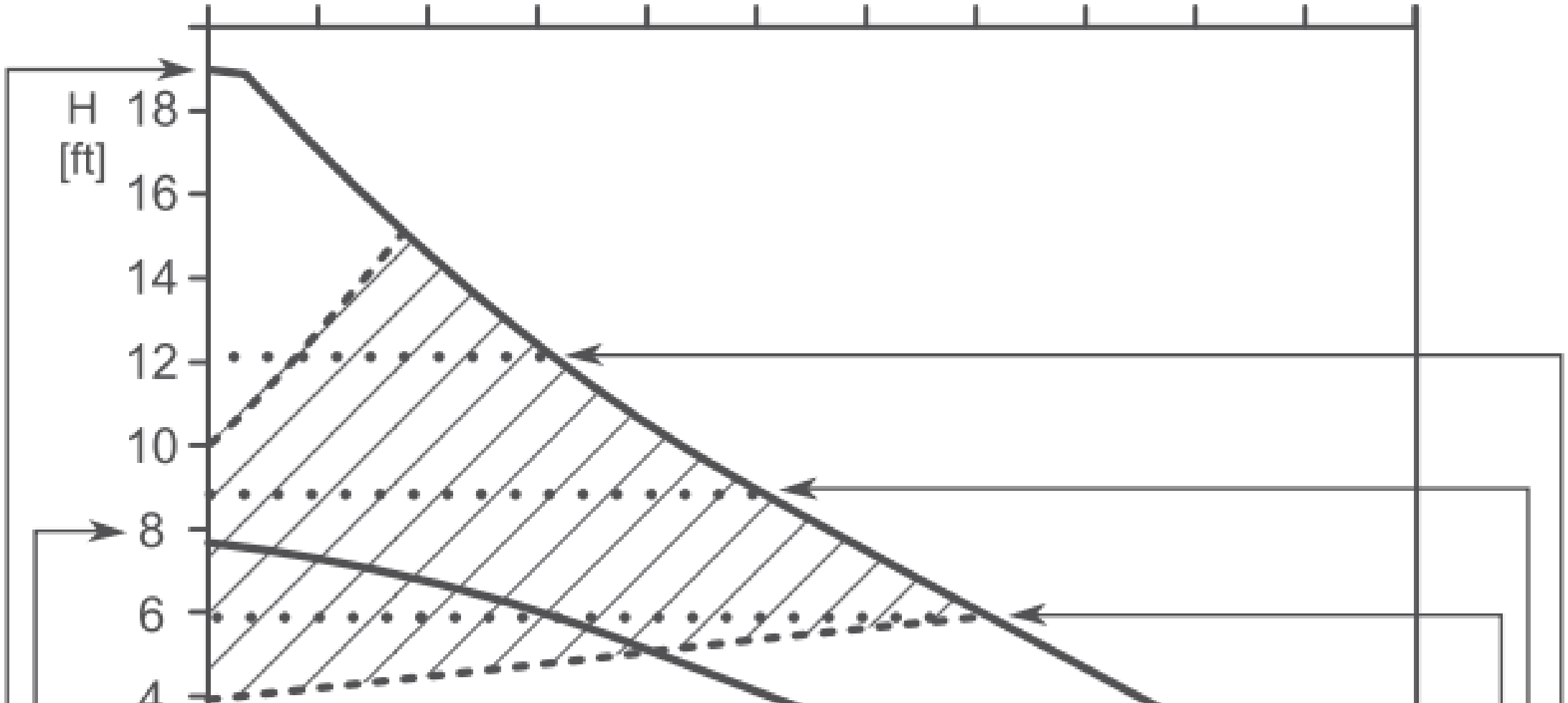

Caleffi Drainback Pump Station with Grundfos UP 15-100

Drainback solar pump stations designed with a high head and steep pump curve which are pre-assembled and leak-tested. Safety relief valve, ball valve, temperature gauge, pressure gauge, air fill valve. Connections for flushing and filling with foam insulation.

Balance/flow meter: 1/2 - 5 GPM scale
Pump: Grundfos UP15-100
Performance: 36 feet head / 8 GPM
Safety relief valve: 90 psi
Max working pressure: 150 psi
Max working temp: 360°F
Connections: 3/4" female thread
Agency approval: cULus

Caleffi Model# 256059A - Preassembled & leak tested - available online for $444.

Grundfos UP 15-100 F Circulator Pump

- Grundfos circulating pump 1/12 HP for solar domestic hot water heating and heating systems.
- Cast iron or stainless steel construction with cast iron volute.
- Standard flange mount.
- Suitable for drainback systems.
- 8.5 GPM with maximum head loss 35 ft.
- Cast iron model available online for $140 (same pump used in Caleffi pump station priced at $444).
- Stainless steel model available online for $240.

Grundfos UP 15-100 F Performance Curve

UP 15-100 F

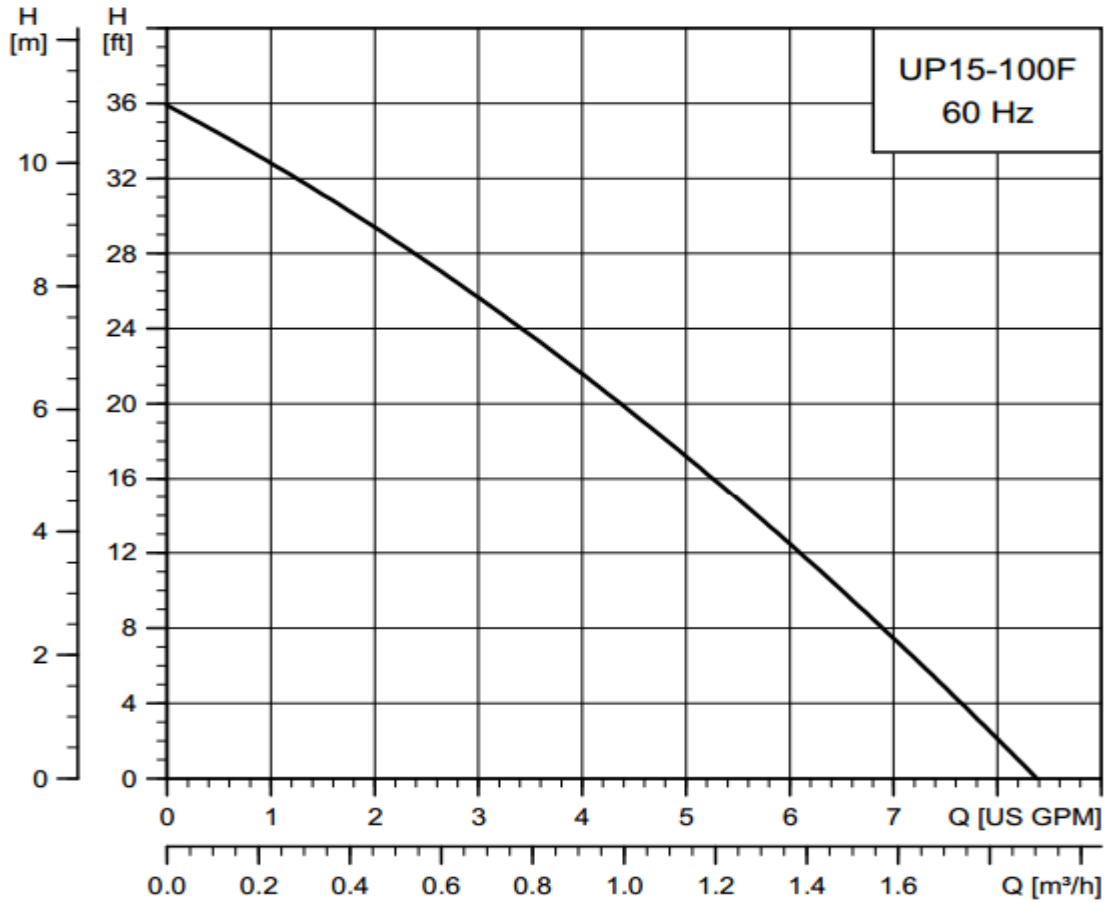

TM03 5534 4412

Flow range:	0-8.4 gpm (0-1.9 m^3h)
Head range:	0-36 ft (0-11.0 m)
Motors:	2-pole, single-phase
Max. liquid temperature:	205 °F (96 °C)
Min. liquid temperature:	36 °F (2 °C)
Max. system pressure:	145 psi (10 bar)
Closed system	

Model	Volts	Amps	Watts	Hp	Capacitor
UP 15-100 F	115	1.1	135	1/25	12µF/170 V

Approvals

c UL US LISTED

Electronically Commutated Motors (ECM)

- Electronically commutated motors (ECM) are much more efficient than permanent split capacitor (PSC) motors, especially at low speeds.
- An ECM is a variable-speed permanent magnet brushless DC motor paired with a programmable control.
- The combination of an ECM variable speed motor with 3-4 manual speed settings and programmable controller is what allows for reducing energy consumption by as much as 85%, particularly for strategically designed HVAC supply and distribution loops.
- ECM technology comes primarily with variable speed circulation pumps and fan motors.

Potential Return on Investment: ECM vs. PSC

- The ROI can be calculated using the following equation:

  ROI (in years) = (Project Cost) / (Energy Savings)

- Included in the project cost are the costs associated with the purchase of the motors and the labor expenses. The project cost as been adjusted to $160 per motor replaced.
  - State Return on Investments (years)
    - Georgia 2.6 - ($0.0914/kWh) [similar in price to residential Idaho Power rate)
    - New York 1.4 - ($0.1672/kWh)
    - Massachusetts 1.3 - ($0.1867/kWh)

Project cost is for example purposes only. True project cost may be higher or lower than given, particularly if ECM pumps and fan motors are purchased via wholesale outlets.

Circulator Pumps	Whole-sale Cost	HL@2 GPM[1]	HL@6 GPM[1]	Amps	Watts	Annual Energy[2]
Taco HEC-2 – ECM variable 4-speed cast iron (CI)	$175	12.75	9.0	0.39-.67	9-42	$8.60
Grundfos UPS 15-55 SUC - 3-speed stainless steel (SS)	$331	16.5	13.0	0.31-0.69	56-87	$49.42
Grundfos UPS 15-55 SFC – 3-speed SS	$303	16.5	13.0	0.53-0.75	58-87	$49.42
Grundfos Alpha 15-55 F/LC ECM variable 3-speed CI	$160	17.5	12.5	up to 0.65	5-45	$8.95
Grundfos UPS 15-58 FC/FRC - 3 speed CI	$95	18.0	14.0	0.55-0.75	60-87	$49.52
Taco 0015 – 3-speed CI	$82	19.5	15.0	0.71-0.98	112	$64.02
Grundfos UP 15-100 F – single speed CI	$140	29.0	12.5	1.1	135	$77

[1]Head loss for GSHP is calculated at a minimum of 3 GPM/ton

[2]Energy costs calculated on pump operating 13 hours a day, 230 days a year. Dollar amount based on $0.19 kWh

Optimizing Head Loss & Reynolds Number

- Head loss is estimated at a minimum of 3 ft./ton of the GSHP to achieve enough turbulence to insure a sufficient heat transfer rate. For use of coils instead of braze plate heat exchangers, head loss can increase substantially.
- Since there is minimal change in heat transfer between a Reynolds number of 2,500 and 10,000, this is the target range for system design of GSHP systems.
- Most 3-4 ton GSHPs will require 10-12 ft. of head loss, with 1-3 ft. head loss per 100 ft. of geothermal tubing.
- Thus, most 1 ton GSHP systems will require a circulation pump that can operate with at least 16 ft. of head/pressure loss at 3 GPM flow rate, or 12.5 ft. head/pressure loss at 6 GPM flow rate.

Brazed Plate vs. Coil Heat Exchangers

- Braze plate heat exchangers have revolutionized methods of indirect heating and cooling of fluids and they are ideal for use with water to water GSHPs to reduce head loss/pressure drops. Unfortunately, most US manufacturers of GSHPs do currently employ this technology.
- A plate heat exchanger is a type of heat exchanger that uses metal plates to transfer heat between two fluids. This has a major advantage over a conventional heat exchanger in that the fluids are exposed to a much larger surface area because the fluids spread out over the plates.
- This facilitates the transfer of heat, and greatly increases the speed of the temperature change. Plate heat exchangers are now common and very small brazed versions are used in the hot-water sections of millions of combination boilers.
- The high heat transfer efficiency for such a small physical size has increased the domestic hot water (DHW) flow-rate of combination boilers. The small plate heat exchanger has made a great impact in domestic heating and hot-water. Larger commercial versions use gaskets between the plates, smaller versions tend to be brazed.

Brazed Plate Heat Exchangers

- The concept behind a heat exchanger is the use of pipes or other containment vessels to heat or cool one fluid by transferring heat between it and another fluid.
- In most cases, the exchanger consists of a coiled pipe containing one fluid that passes through a chamber containing another fluid.
- The walls of the pipe are usually made of metal, or another substance with a high thermal conductivity, to facilitate the interchange, whereas the outer casing of the larger chamber is made of a plastic or coated with thermal insulation, to discourage heat from escaping from the exchanger.

Optimizing Flow Rate & Heat Transfer Rate

100% Water	Water Temp.	Reynolds #	Nu	h
3.0 GPM	40 °F	4,517	42.54	123.64
“ “	100 °F	10,414	68.45	219.61
6.0 GPM	40 °F	9,034	85.77	249.32
“ “	100 °F	20,827	126.54	405.95

For integrated solar thermal and water to water GSHP hydronic-radiant floor heating systems, the target water temp on the distribution side will be 90 °F with a Delta T of 20 °F. At these temperatures the heat transfer rate should be optimized, particularly at the 6 GPM flow rate if head loss can be minimized (9-12.5 ft. for either the Taco HEC-2 ECM variable 4-speed or the Alpha 15-55 F/LC ECM variable 3-speed) via parallel plumbing of coils and strategic design of: solar thermal and geothermal supply loops; and radiant floors and fan-coil distribution loops.

Solar Savings Fraction

- In discussing solar energy, the solar savings fraction or solar fraction (f) is the amount of energy provided by the solar technology divided by the total energy required to produce solar energy.
- The solar savings fraction thus is zero for no solar energy utilization, to 1.0 for all energy provided by solar. The solar savings fraction of a particular system is dependent on many factors such as the load, the collection and storage sizes, the operation, and the climate. As an example, the same solar-thermal water heating system installed in a single-family house in Arizona might have f=0.75 (75%), while in a much colder and cloudier climate, like Pittsburgh, PA, might only have a solar fraction of f=0.3 (30%) or so.
- Great care is thus needed in designing such systems, and in evaluating their economics.

Optimal Solar Fraction for Boise, ID

- According to NREL's passive solar design strategies for Boise, ID it is possible to achieve the following for the PHMH project:
  - 25% for 186 sqft of south facing glazing
  - 23.6% for R-9.1 glazing insulation
  - >50% for concrete cistern solar thermal battery system integrated with the thermal mass of an insulated concrete form (ICF) structure
  - The thermal mass of concrete structures and hydronic-radiant floor heating and cooling provide the potential to conserve up to 24% of the required energy for that structure
- The above estimates indicate that it may be possible through a combination of solar radiation, solar thermal, solar PV, and geothermal design strategies to achieve >100% solar fraction.

Thermal Capacity of Sand & Water

- Dry sand has 75% of the thermal energy (specific heat) capacity of water.
- Thermal conductivity is substantially less for sand vs. water.
- Depending on coarseness of sand, it has up to 40% porosity. At 40% porosity, sand can hold 40% water which can more than double the specific heat capacity for the same volume of dry sand.
- Since the heat transfer of water is substantially greater than that for air, the thermal conductivity and diffusivity substantially increases for hydrated sand in comparison with dry sand.
- Up to 1.25” or possibly larger sized HDPE or PEX tubing could be used (with wider spacing to reduce costs) as heat exchangers for the sand bed due to more efficient thermal conductivity and diffusivity of hydrated sand.

Thermal Conductivity and Diffusivity of Sand and Clay Soils

Thermal Conductivity (k) - **Btu/hr-°F-ft** and Thermal Diffusivity (α) - **ft^2/day**

Soil Type	Dry Density	5% Moist		10% Moist		15% Moist		20% Moist	
		k	α	k	α	k	α	k	α
Coarse 100% Sand	120 lb/ft^3	1.2-1.9	0.96-1.5	1.4-2.0	0.93-1.3	1.6-2.2	0.91-1.2	-	-
	100 lb/ft^3	0.8-1.4	0.77-1.3	1.2-1.5	0.96-1.2	1.3-1.6	0.89-1.1	1.4-1.7	0.84-1.0
	80 lb/ft^3	0.5-1.1	0.60-1.3	0.6-1.1	0.60-1.1	0.6-1.2	0.51-1.0	0.7-1.2	0.52-0.90
Fine Grain 100% Clay	120 lb/ft^3	0.6-0.8	0.48-0.64	0.6-0.8	0.4-0.53	0.8-1.1	0.46-0.63	-	-
	100 lb/ft^3	0.5-0.6	0.48-0.58	0.5-0.6	0.4-0.48	0.6-0.7	0.37-0.48	0.6-0.8	0.41-0.55
	80 lb/ft^3	0.3-0.5	0.36-0.6	0.35-0.5	0.35-0.5	0.4-0.55	0.34-0.47	0.4-0.6	0.30-0.45

Coarse grain = 0.075 to 5 mm - Fine Grain less than 0.075 mm

Thermal conductivity of some common materials and products:

•*1 W/(m.K) = 1 W/(m.°C) = 0.85984 kcal/(hr.m.°C) = 0.5779 Btu/(ft.hr.°F)*

•*1 W/(m.K) = 1 W/(m.°C) = 0.85984 kcal/(h.m.°C) = 0.5779 Btu/(ft.h.°F) = 0.048 Btu/(in.h.°F)*

Thermal Conductivity - k - W/(m.K)			
Material/Substance	Temperature - °C		
	25	125	225
	Acetals	0.23	
Air, atmosphere (gas)	0.024		
Air, elevation 10000 m	0.020		
Breeze block	0.10 - 0.20		
Brick dense	1.31		
Brick, insulating	0.15		
Brickwork, common	0.6 -1.0		
Brickwork, dense	1.6		
Calcium silicate	0.05		
Carbon	1.7		

Sand Bed Thermal Storage Economics

- Though the initial costs of building a dry or hydrated sand bed including insulation and PVC liner or other vapor barrier are more costly than a conventional HVAC system, this green passive house technology requires no fossil fuels.
- Research reveals that integration of a radiant floor system in conjunction with the solar heated sand bed optimizes energy efficiency for this renewable energy technology.

Dry Sand Bed Architectural Design

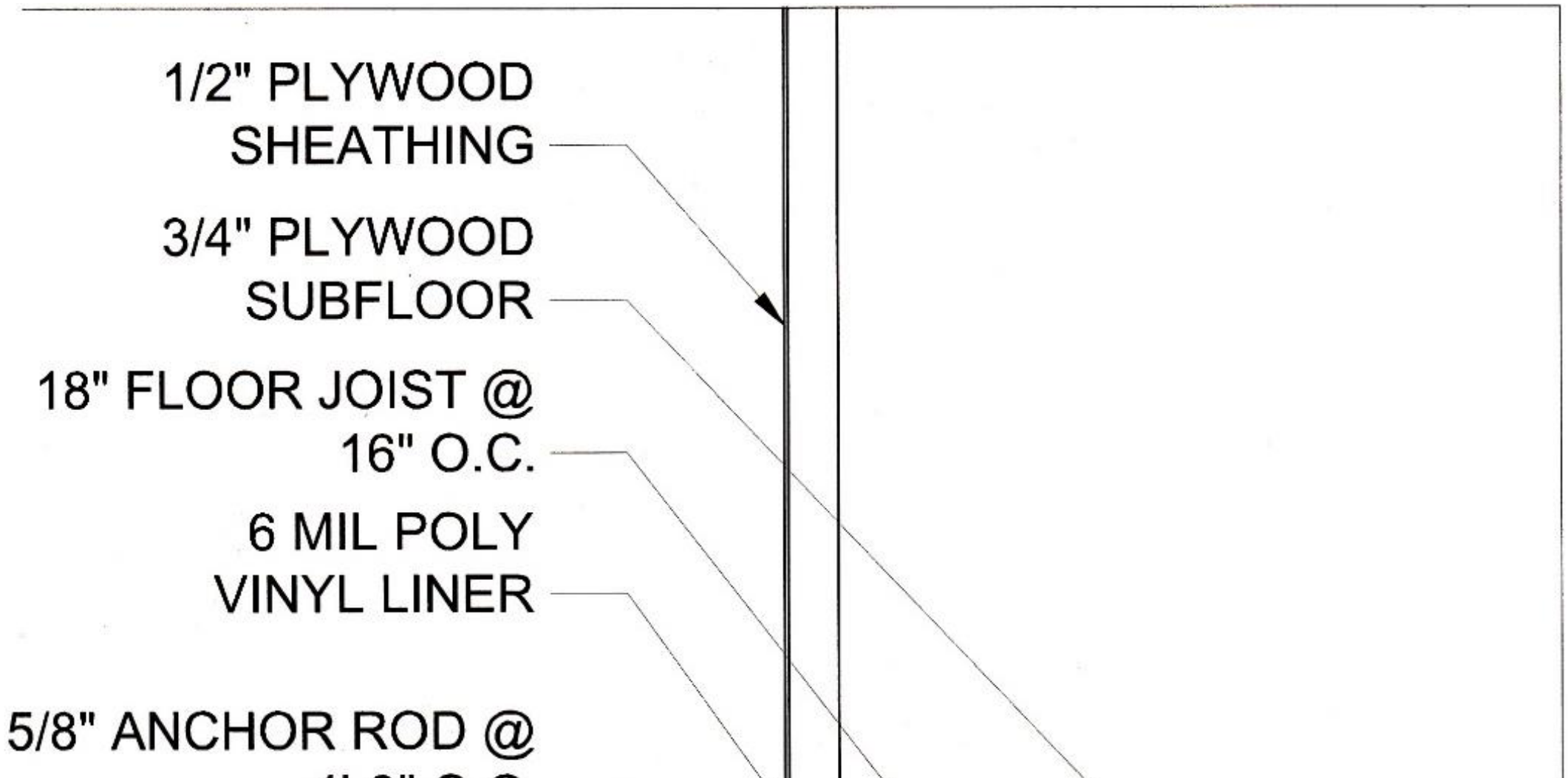

Virginia Heatstore Residential Demonstration

- The thermostat regulated dry sand bed (Virginia Heatstore) was developed by Dave Stets of Richmond BySolar and is a modified version of the sand bed originally developed by Bob Ramlow.
- The first “Virginia Heatstore” was built as a retrofit to an existing home near Richmond, VA in 2010.
- A heatstore is like an energy battery in the ground that stores heat. It has been the primary heat source since it was activated in 2011.
- It is backed up with a 210 gallon solar hot water system – which was already in the home. There has been no need for fossil fuel to heat the house since the dry sand bed system was activated.

Dry Sand Bed Proof of Concept

- The energy community typically uses the term Seasonal Thermal Energy Storage (STES) as the category for the Virginia Heatstore technology.
- The demonstration house is heated to 72°F during the winter by radiant heat installed on top of the sub-floor.
- The Heatstore has been estimated to provide 75% to 95% of the heating for the house depending on the climate for the year.
- Performance has been better than TRNSYS energy modeling predicted.

Integration with 100% Variable GSHP

- At 72°F the Virginia Heatstore demonstration met the seasons heating needs unless there were long periods of rain and clouds such as that provided by tropical storms.
- Engineers used 68°F in their modeling and simulation.
- At 77°F the heatstore lost heat too rapidly and it appears that such a relatively higher heating load would not have been sustainable through the entire winter.
- A 100% variable water to water GSHP would be ideal for integration with the dry sand bed thermal storage system to supplement the dry sand bed thermal storage and also provide cooling using the same radiant floor system.

Dry Sand Bed Performance & Design

- The dry sand bed (Virginia Heatstore) has two tasks:
  - 1) to store heat and
  - 2) to deliver hot water to the house on demand for the radiant floor.
- The demonstration house was equipped with highly efficient radiant flooring combined with a low R engineered hardwood floor.
- The flooring only requires 115°F water as input. Since the heatstore may reach 160°F or hotter, the system is designed to mix the output from the heatstore with the returning water from the house which is typically 85°F. This efficiently reduces the water temperature to the targeted 115°F.

Solar Thermal Dry Sand Bed Schematic

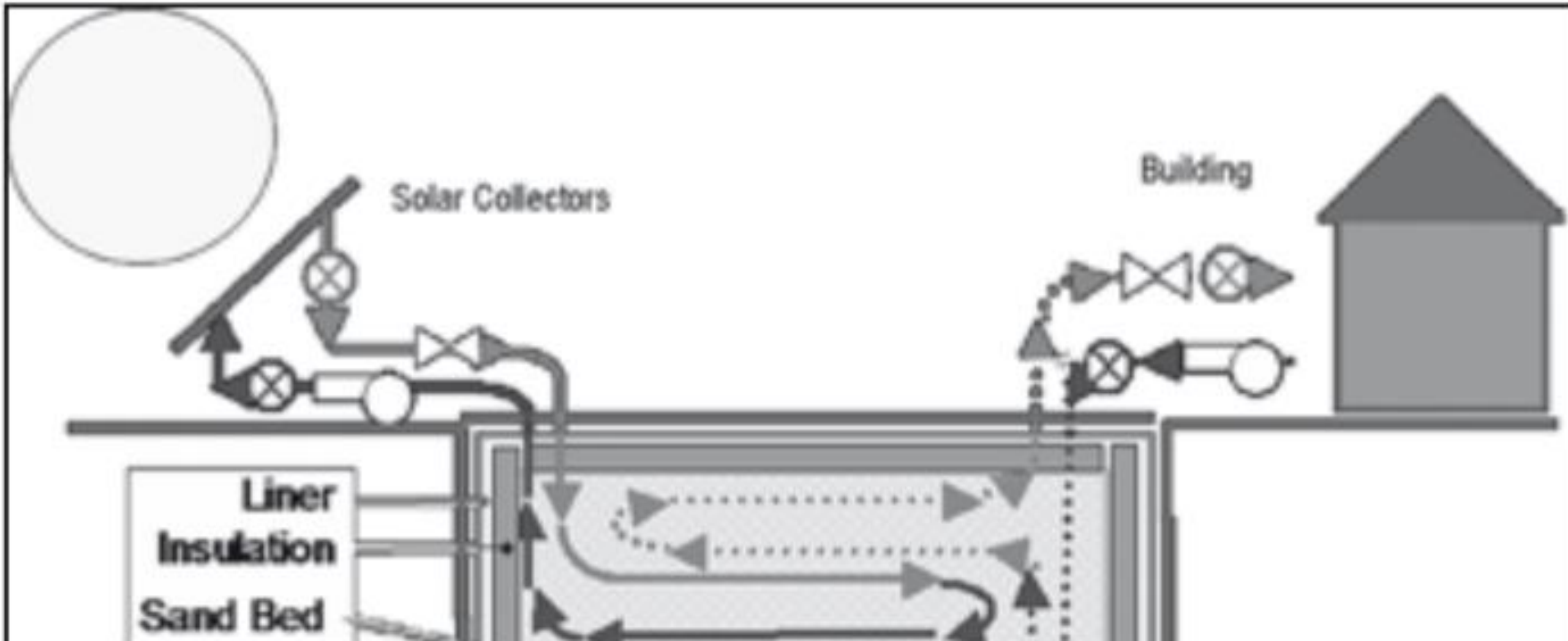

Heat Capacity of Water vs. Sand

- 1 cubic foot (ft.^{3}) of water is equal to 7 US gal. which weighs 70.157 lb. Compacted sand weighs about 105 lb. per ft.^{3}. One ft.^{3} of dry compacted sand can store the same amount of heat as 3.2 gal. of water. This reveals that the heat capacity of water is 2.188 fold greater than dry compacted sand.
- In addition, water can transfer more heat than dry compacted sand. This reveals that due to lower density and up to 40% porosity, dry compacted sand can transfer only about 25% of the heat in comparison with water. Using water as the storage medium instead of sand results in decreasing the size of the thermal energy storage area by about 75%.

SSTES Concrete Cisterns

- In comparison with hydrated sand beds, water storage tanks would require almost identical insulation, waterproofing, and vapor barriers.
- The primary obstacle is providing super-insulation at the lowest cost possible in order to minimize heat loss. The following ICF water tank was constructed for Alaska using 12” of Rigid EPS/XPS or polyiso foam and a 10 mil poly waterproof liner.
- For a strategically designed radiant floor heating system with a ΔT of only 10°F, the mean storage temperature of the water could be substantially less than 160°F, e.g., as low as 100°F. This would assist with minimizing heat loss as would the shape and design of the cistern which minimizes surface contact with the soil. However, as the storage temperature is decreased, the volume of storage area must be increased.

Below Grade ICF Concrete Cistern for Fairbanks, Alaska Structure

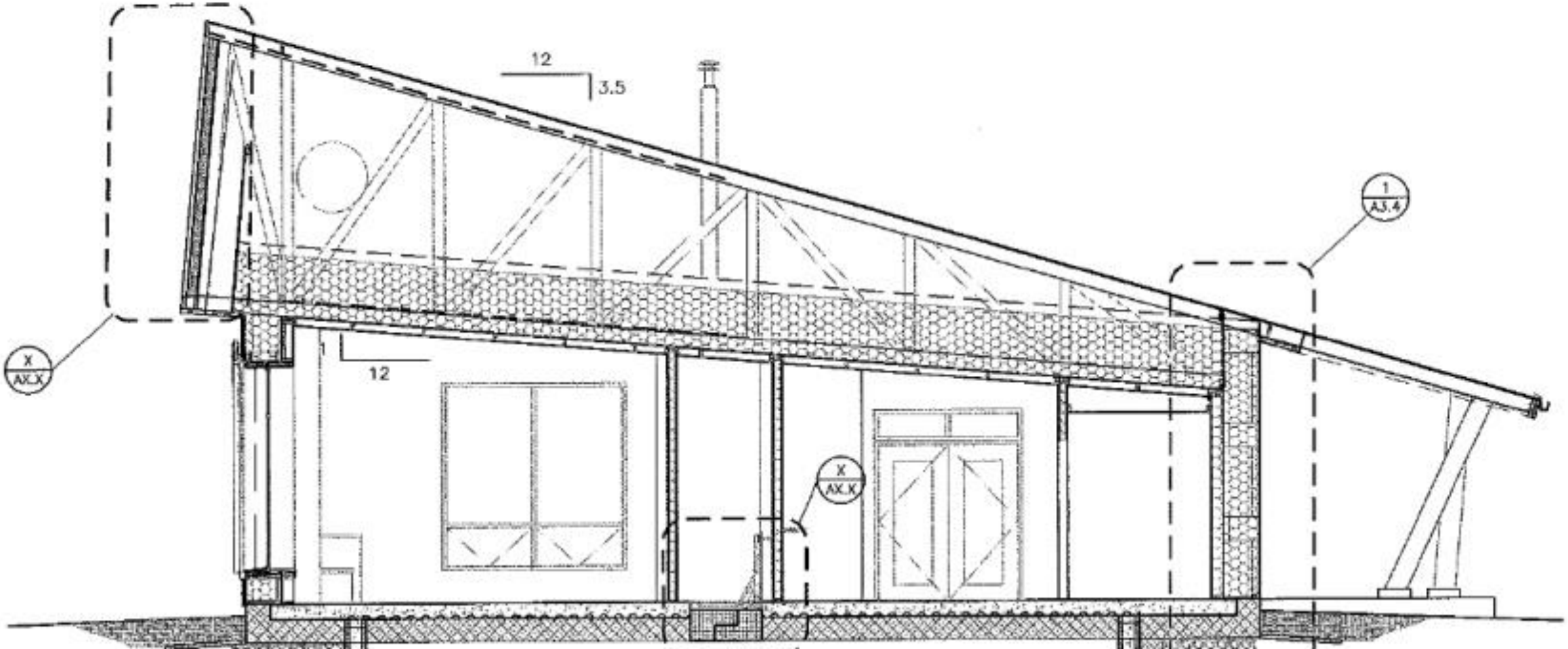

Roof or Ground Mounted Solar Systems

- The above illustration is for a roof mounted system solar panel system that is designed as part of the roof structure in Fairbanks, AK. The latitude in Fairbanks is 64.84 degrees, so the optimal angle for solar panels in the winter is 88.36 degrees facing south.
- Unlike Alaska which as nearly a 90 degree angle, the design and angle of solar panels in the lower 48 states will be substantially less. For passive solar systems in the lower 48 states the angle of the panels are usually designed for installation on the top of the roof or possibly ground mounted.

Calculating Overhang of Eaves & Pitch of Roof for Homes in Boise, ID

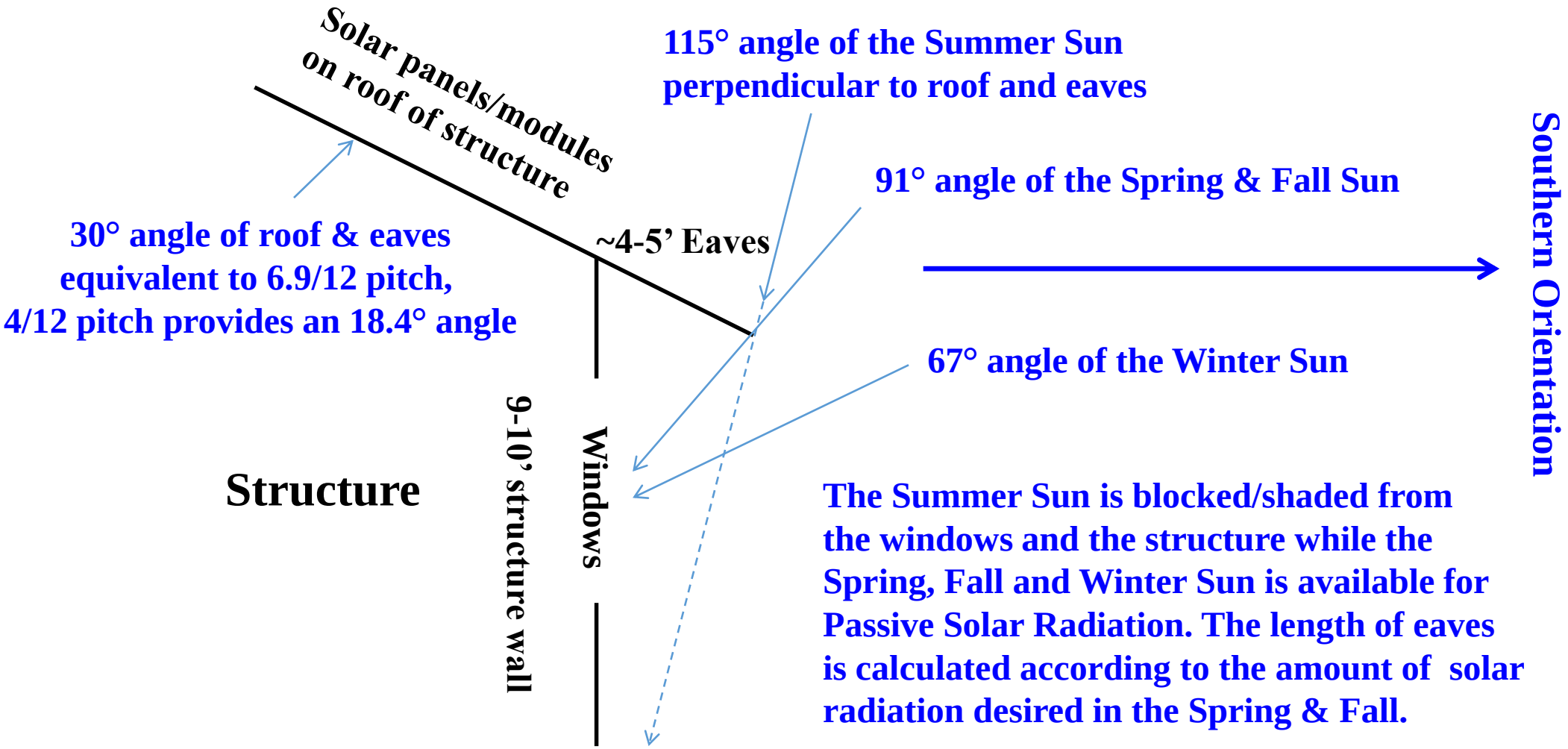

The Summer Sun is blocked/shaded from the windows and the structure while the Spring, Fall and Winter Sun is available for Passive Solar Radiation. The length of eaves is calculated according to the amount of solar radiation desired in the Spring & Fall.

Boise, ID Latitude & Solar Thermal Angle for Collector Panels

- The latitude in Boise, ID is 43.62 degrees
- During the winter, the tilt of collectors for a passive solar system should be designed so that the panel points directly at the sun at noon. To calculate, multiply latitude by 0.9, and add 30 degrees.
- In Boise, ID, the angle of the tilt would be 69.26 degrees. So for a 6.9/12 pitch roof at a 30 degree angle/slope, the solar thermal racking system would require an additional angle of 39.26 degrees to provide the targeted 69.26 degree angle for optimizing solar thermal performance in the winter.

Manual Adjustments of Panel Angles for Passive Solar Systems

- Many solar panel systems, both PV and thermal, allow for manual adjustments. Adjustments should be made around March 1, April 19, August 23, and October 14th for the Northern hemisphere, half year later for the southern hemisphere.
- Tilt angle: spring and autumn - latitude minus 2.5°.
- Tilt angle for summer - 52.5° less than the winter angle.
- These recommendations are based on sea level with an unobstructed view of the sky. At altitude, lowering the angle of tilt by a few degrees will capture more sunlight when the sun is lower in the sky.
- A thinner atmosphere increases efficiency of performance.

Automatic Adjustments of Panel Angles for Passive Solar Systems

- An alternative to the manual adjustments for the angles of a passive solar system would be to use a hybrid system that automatically adjusts the angles of fixed panels for the various seasons.
- Such a system could adjust the solar PV collectors/panels separate from the solar thermal collectors/panels which are used primarily for production of DHW and space heating in the winter and shoulder seasons.
- Through incorporation of programmable automated controller technology, the seasonal adjustable racks could be automated for fixed/passive solar systems installed on roofs or on the ground.

Surface Areas: Cylindrical vs. Square

- The surface area of a 1,500 gal. cylindrical container is calculated :
  - Surface Area of Cylinder (r =~3.26 ft; h =6 ft.) = $2\pi r^2 + 2\pi rh$ = 189.578 ft^2
  - 1500 gal. Volume = $\pi r^2 h$ = ~200.22 cubic ft.
- The volume and surface area of a 1,500 gal. square container is calculated:
  - Surface Area of Square = 5.85’ x 5.85’ x 6 = 205.33 ft^2
  - Volume = 5.85 ft^3 = ~200.20 cubic ft.
- When a 1,500 gal. cylindrical tank is compared with a square or rectangular container of the same volume with identical wall thickness, the surface area of the cylindrical tank is ~8% less than a square container, and substantially less for a rectangular container.
- Thus, cylindrical containers are at least 8% more efficient when compared to energy loss for square or rectangular containers. An exception could be the strategic design where the square or rectangular concrete cistern is placed with the large side facing conditioned space such as the mechanical room.

Concrete Cistern - Thermal Battery

- In order to achieve high solar fractions in heating systems, large collector areas and storage volumes are needed.
- Development of a cost effective hot water storage system underground would be ideal.
- German researchers are developing concrete cisterns using temperature resistant XPS foam insulation for targeting solar fractions above 50% in single and multi family houses with favorable results.
- The first prototype was installed and measured in 2010; its storage volume was 5.5 m^3 (1,403 gal.). During several measurements thermal storage revealed a heat loss rate of 5 W/K (0.88 BTU/ft^2°F). The mean storage temperature decreased 1 K degree (1°C or 1.8°F) per day for a temperature of the storage water between 85°C (185°F) and 65°C (149°F). Tests with charging and discharging cycles and with water saturated surrounding soil resulted in only a marginal increase in heat losses.
- For considerably larger thermal batteries (concrete cisterns) energy losses should decrease proportionately as a function of the ratio of volume to surface area.

Owens Corning XPS Foamular Board

- Subsequent to the German research, BASF SE has suspended development of the their thermal resistant XPS insulation board.
- Owens Corning’s dense XPS Foamular insulation board has a thermal limit of 150°F for constant exposure with a life cycle similar to their other insulation products.
- Hence, the solar thermal battery system would need to be designed around a maximum temperature of 150°F in order to accommodate use of the Owens Corning Foamular product.
- As opposed to the 200°F temperature, the 150°F temperature would allow for reducing heat loss for an underground concrete cistern, but it would also reduce heat capacity of the concrete cistern/thermal battery.

Heat Transfer Coefficient

The heat transfer coefficient or film coefficient, in thermodynamics and in mechanical and chemical engineering, is the proportionality coefficient between the heat flux and the thermodynamic driving force for the flow of heat (i.e., the temperature difference, ΔT):

$$\boldsymbol{h = q/\Delta T}$$

q : heat flux, W/m^2 i.e., thermal power per unit area, $q = dQ/dA$

h : heat transfer coefficient, $W/(m^2 \cdot K)$

ΔT : difference in temperature between the solid surface and surrounding fluid area, K

It is used in calculating the heat transfer, typically by convection or phase transition between a fluid and a solid. The heat transfer coefficient has SI units in watts per squared meter kelvin: $W/(m^2K)$. Heat transfer coefficient is the inverse of thermal insulance. This is used for building materials (R-value)

Thermal Storage Capacity: Concrete Cisterns

- In order to accurately calculate thermal storage capacity for heat transfer for an underground concrete cistern, heat loss must be correlated to the ratio of surface area to volume.
- Both heat loss and rate of gain from the solar thermal collectors must be accounted for in order to assess performance of a specific thermal battery or thermal energy storage system.
- As the volume/area of the concrete cistern is increased, it’s ratio to surface area increases proportionately.
- Thus, the percentage of heat loss decreases proportionately as the size/volume of the concrete cistern is increased.

Potential for Increasing Efficiency of Heat Storage by Increasing Volume

- For a 24’ x 12’ rectangular concrete cistern, the ratio of surface area (~1,188 sqft) to volume (~16,000 gal.) increases proportionately with increases in volume.
- At an 8' depth, the ratio is 13.3, at a depth of 10.5' (21,000 gal.) the ratio increases to 15.8, and at a depth of 12.5' (27,000 gal.) the ratio increases to 19.13, a 44% increase which should substantially decrease the rate of heat loss in comparison with volume or heat storage capacity.
- The increase in volume/heat storage capacity resulting from increasing the depth by 4.5' is 42.53%. The 6.8 yd. of additional concrete represents only a 19% increase in concrete for a 42.53% gain in heat storage capacity, a proportionate decrease in heat loss, and a 110% gain in thermal storage capacity.

Over 44% Increase in System Efficiency

- For example, a German study reveals that the mean storage temperature for a 5.5 m^3 (1,403 gal.) underground concrete cistern decreases 1 K degree (1°C or 1.8°F) per day for a temperature range of the storage water between 85°C (185°F) and 65°C (149°F).
- During several measurements of the 1,403 gal. concrete cistern, thermal storage revealed a heat loss rate of 5 W/K (0.88 BTU/ft^2°F).
- Provided the solar thermal collectors are sized appropriately, as the ratio of volume to surface area of the concrete cistern increases by 44% via the above example for a 27,000 gal. cistern, subject to validation this could effectively reduce the percentage of heat loss by up to 44%, e.g., well under 0.44 K/day (1°F/day) when the 1,403 gal. concrete cistern is compared to a 27,000 gal. cistern.

Maintaining Thermal Energy Capacity

- Based on a daily heat loss of 1°F for a 27,000 gal. concrete cistern located 8-20’ underground, this would be equivalent to a loss of 225 k BTUs/day or 9.4 kBTU/hr.
- In the sunny middle of the US, one sqft of Solar Flat Panels can produce an average of 294,000 BTU’s per year. On a bright Fall or Spring day they will produce 1,418 BTU’s per sqft per day.
- For a peak heating load of 9000-11,000 kBTU/day in a climate that typically provides 1,418 BTU/sqft/day, 70-100 sqft of passive solar thermal panels would be required. Allowing for cloudy days and shorter winter days, doubling sqft to 140-200 sqft should be sufficient for optimizing production of solar thermal energy while compensating for daily heat loss of 405 KBTUs (27,000 gal. x 8.33 lb./gal. x 1.8°F) for a 27,000 gal. cistern.

Solar Thermal Collectors

- In conjunction with thermal battery systems, solar thermal collectors can strategically provide 50-100% of the thermal energy required for hydronic-radiant floor heating systems.
- In conjunction with integrated GSHP-Desuperheater-ERV systems, preheating of intake air and water can minimize Delta T (EWT and LWT) for hydronic supply and distribution systems, thus effectively boosting the COP and EER of the GSHP by up to two fold.
- Unlike solar PV systems which have energy conversion efficiencies ranging from 15-17% (plus a 15% loss during conversion from DC to AC), the energy efficiency of solar thermal systems can range as high as 85%.
- Solar thermal and geothermal are ideal alternative energy resources for use in conjunction with relatively low energy requirements of hydronic delivery systems, e.g., radiant floor heating and cooling; and 2nd stage fan-coil/air handler systems for managing latent energy (keeping relative humidity below 45%) while supplementing radiant heating and cooling.

Thermal Battery Systems

- Since solar thermal collectors are most productive during hot summer months, thermal batteries can provide long term storage of that excess thermal energy for strategic use during cooler months.
- The thermal battery also provides emergency water storage and can be used in an all water system or equipped with coils that serve as heat exchangers for use with glycol (antifreeze) solutions used in GSHP systems.
- Hydrated sand baths, when strategically utilized as heat dumps in the Fall, Winter and Spring months, can also serve as relatively efficient thermal battery systems with the ability to store over 13,000 gal. of water in the sand bath alone (providing well over 30 million BTUs in the sand bath and surrounding soil) located 8 ft. underground.

THE HOFFMAN HOUSE

Solar Thermal Heating System

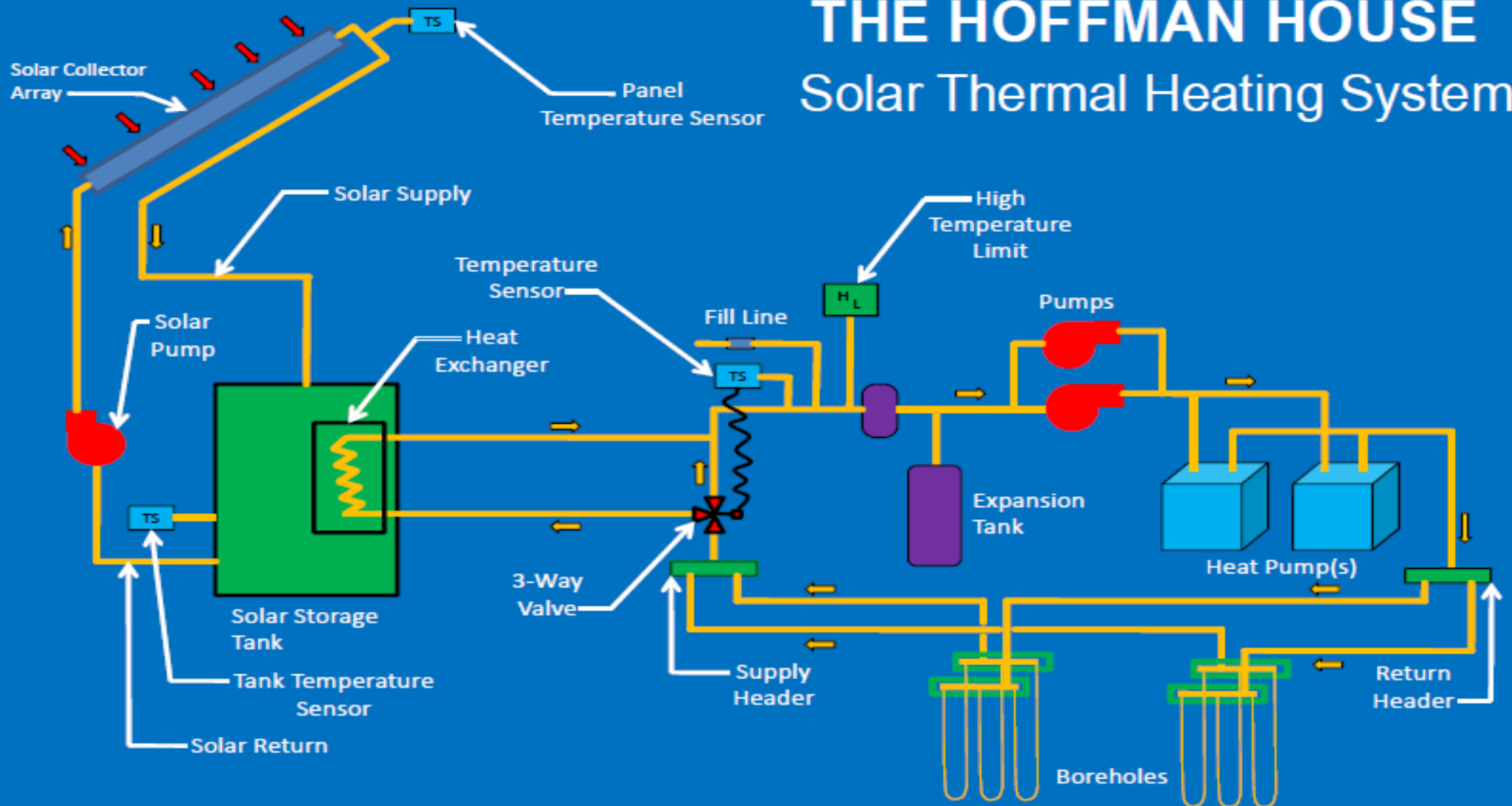

Solar Thermal Collector: Productivity & Storage

- A 160-200 sqft solar thermal collector system can produce 82.8 MMBTUs or 103.5 MMBTUs annually, respectively. Most of this thermal energy is produced during the hot and sunny summer months when the vast majority of it is not needed, e.g., when the HVAC system is in cooling mode (only DHW is routinely required).
- The larger the thermal battery system, the more thermal energy can be stored. However, even a relatively large 6,000 gal thermal battery can only store a fraction (less than 10%) of this thermal energy. Thus, from a strategic vantage point the thermal battery should be continually used and recharged to take advantage of this resource.
- During the Fall, Winter and Spring months, a portion of the excess thermal energy could be used to strategically hydrate the geothermal loop fields and the ground to air heat exchanger without affecting the transition to cooling mode during the warmer months, particularly if a separate buffer tank is used for the cooling cycle.

Thermal Battery Capacity & Minimizing Delta T

- A 6,000 gal. concrete water tank (9.29 ft^3) used as a thermal battery (ranging in water temperature from 45 to 120°F; and from 70 to 120°F) can store between 3.75 and 2.5 million BTUs, respectively.
- In order to minimize ΔT, the ideal temperature range for the thermal battery would be 70 to 120°F for a hydronic-radiant floor heating system (using a high speed mixing-injection pump) with 2nd stage ERV-fan coil/air handler subsystem.
- For a solar thermal collector system designed to meet 70-90% of peak heating capacity, when the thermal battery subsystem is integrated with an ERV-GSHP system and a ground to air heat exchanger, unprecedented energy efficiency, heat transfer, and GSHP COPs can be achieved by minimizing ΔT of EWT and LWT.

Concrete Water Tank – Dimensions & Shape

- The capacity of a concrete water tank can be increased substantially with incremental increases in dimensions and minimal costs in concrete (23 yards plus footings for a ~16,000 gal. cistern with 8” walls – about $0.35/gal plus ~$1.60/sqft for EPS insulation and glue).
- For example, a 6,000 gal. water tank would require 802 cubic ft., or 9.29 ft^3, while 10 ft^3. would provide a 7,479 gal. water tank equivalent to 1,000 cubic ft. capacity.
- Based on the area of a circle ($A=\pi r^2$), a 7,479 gal cylindrical water tank would have a diameter of 11.29 ft. and would be 11.29 ft. tall.
- A 20 ft. diameter water tank at 10 ft. high would have an area of 7,850 ft^3 and would hold 5,872 gal. It would require slightly less concrete than a rectangular or square shaped water tank with the same capacity, but would be much more labor intensive to construct unless circular forms are designed to be reused.

Optimal Capacity of Thermal Battery

- Based on <4 hr. sun days, on a bright and sunny Fall or Spring day in Boise, ID, a 200 ft.^{2} solar thermal collector can produce ~283,600 BTU/day. After subtracting 24 hr. of heat loss (400 kBTU/day) for a 4,000 gal. concrete cistern with R-60 insulation located directly below the mechanical room, there is a net loss of 116,244 BTU/day for the thermal battery.
- However, by minimizing the T, increasing insulation to R-250, and increasing the size of the solar collector to 320 ft.^{2}, an underground concrete cistern could be sized at about 4,000 gal. in order to be feasible for use in a thermal battery system.
- In other words, depending on the peak heating and cooling requirements of a structure, geographical locality, weather patterns, and solar thermal energy needs, an optimal balance between size of solar thermal collector system and the size of the thermal battery must be achieved in order to be sustainable.

Modeling Size of Thermal Battery System

- Variables for Excel x-y Graphs for Predicting Heat Loss
  - Size of cylindrical concrete cisterns
    - Surface area minus exposure to mechanical room
  - Size of square or rectangular concrete cisterns
    - Surface area minus exposure to mechanical room
  - ΔT
  - Insulation

    R-40 R-60
    R-80 R-100
    R-150 R-200 R-250
  - Size of solar thermal collector system
  - Thermal energy storage capacity

    50°F
    100°F
    150°F

Heat Loss & Storage Volume

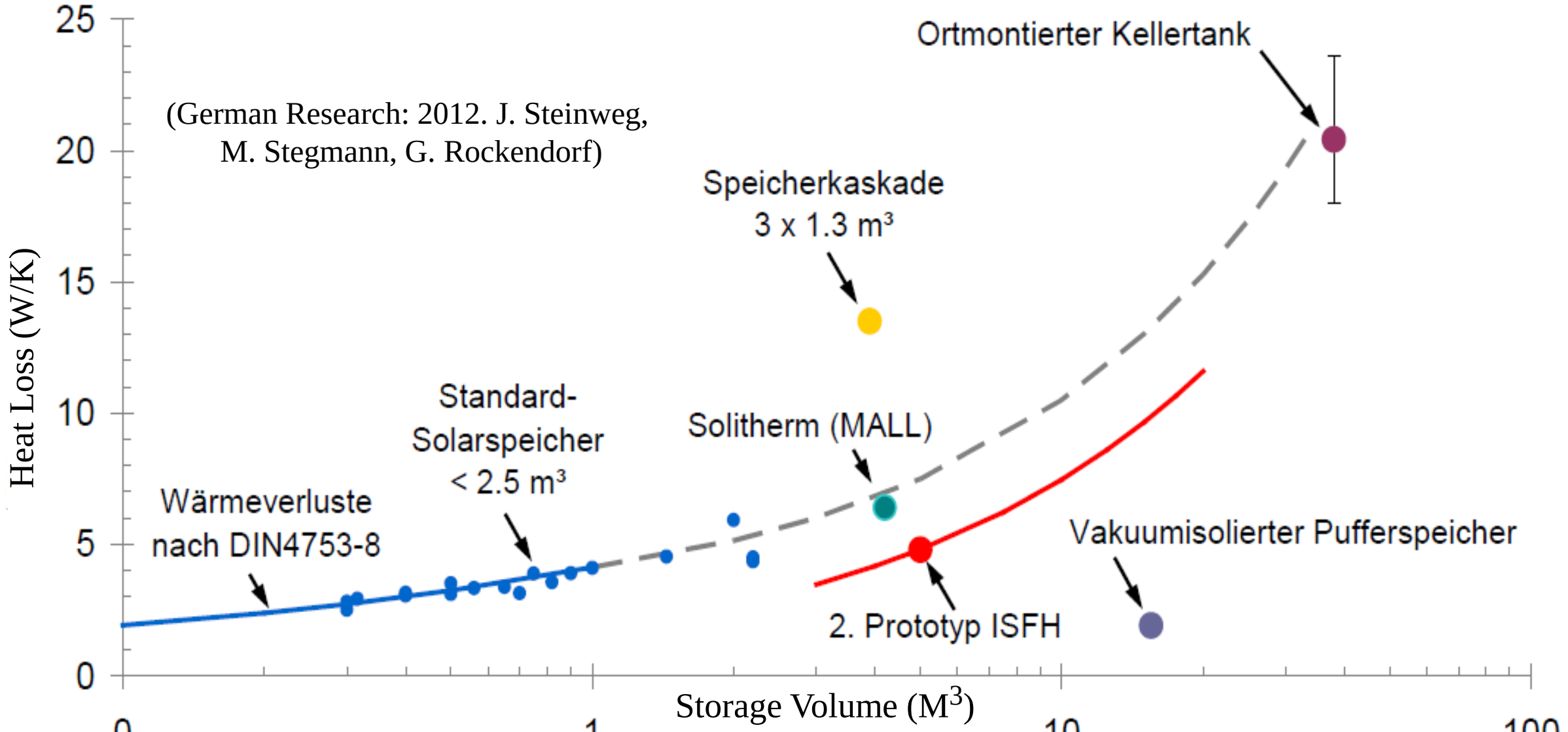

Solar Thermal Energy Storage
ΔT, Insulation & Heat Loss

- In order for a solar thermal battery system to be practical and economical, it must be able to produce and store more energy than is lost.
- For example, calculating energy loss for a 27,000 gal concrete cistern with R-60 and R-100 insulation values and ΔT values of 100°F and 80°F (50°F ground temp., and at both 130°F and 150°F cistern temperatures) reveals the following:

$$\text{BTUs/hr} = \frac{Area}{R\text{-}Value}(\Delta T) \text{ x 24 hr. = BTU/day}$$

$$\frac{27{,}000\ gal.x\ 8.33\frac{lb}{gal}}{R\text{-}60}(100°F) = 374{,}850 \text{ BTUs/hr}$$

$$\frac{27{,}000\ gal.x\ 8.33\frac{lb}{gal}}{R\text{-}60}(80°F) = 299{,}880 \text{ BTUs/hr}$$

$$\frac{27{,}000\ gal.x\ 8.33\frac{lb}{gal}}{R\text{-}100}(100°F) = 224{,}910 \text{ BTUs/hr}$$

$$\frac{27{,}000\ gal.x\ 8.33\frac{lb}{gal}}{R\text{-}100}(80°F) = 179{,}928 \text{ BTUs/hr}$$

Heat loss can be reduced 8% by using cylindrical cisterns, strategically reducing surface area exposed to the environment (placing under the mechanical room), increasing insulation, and decreasing ΔT. In order to be sustainable, solar thermal collectors must consistently produce more thermal energy than that which is lost.

Solar Thermal Energy Storage
ΔT, Insulation & Heat Loss cont.

- A 27,000 gal. cistern would have to produce 374-405 kBTUs/hr. in order to compensate for heat loss for a ΔT of 100°F. If the ΔT dropped to 50°F, then the heat loss would be reduced to 202.5 kBTUs/hr.
- Notice that the heat loss according to the above calculation is 8% less than the 375 kBTU/hr calculated based on the rate of heat loss observed by the German research group using a relatively small, e.g., 1,403 gal concrete cistern.
- The volume of solar collectors (6,770 sqft) required to compensate for the 405 kBTU/hr. heat loss for the 27,000 gal. cistern is simply not feasible for single family dwellings.

Solar Thermal Energy Storage
ΔT, Insulation & Heat Loss cont.

$$\text{BTUs/hr} = \frac{Area}{R\text{-}Value}(\Delta T) \text{ x 24 hr. = BTUs/day}$$

$$\frac{6{,}000\ gal.x\ 8.33\frac{lb}{gal}}{R-60}(100°F) = 83{,}300 \text{ BTUs/hr}$$

$$\frac{6{,}000\ gal.x\ 8.33\frac{lb}{gal}}{R-60}(50°F) = 41{,}650 \text{ BTUs/hr}$$

$$\frac{4{,}000\ gal.x\ 8.33\frac{lb}{gal}}{R-60}(100°F) = 55{,}533 \text{ BTUs/hr}$$

$$\frac{4{,}000\ gal.x\ 8.33\frac{lb}{gal}}{R-60}(50°F) = 27{,}767 \text{ BTUs/hr}$$

$$\frac{4{,}000\ gal.x\ 8.33\frac{lb}{gal}}{R-100}(100°F) = 33{,}320 \text{ BTUs/hr}$$

$$\frac{4{,}000\ gal.x\ 8.33\frac{lb}{gal}}{R-100}(50°F) = 16{,}660 \text{ BTUs/hr}$$

$$\frac{2500\ gal.x\ 8.33\frac{lb}{gal}}{R-60}(100°F) = 34{,}708 \text{ BTUs/hr}$$

$$\frac{2{,}500\ gal.x\ 8.33\frac{lb}{gal}}{R-60}(50°F) = 17{,}354 \text{ BTUs/hr}$$

$$\frac{2500\ gal.x\ 8.33\frac{lb}{gal}}{R-100}(100°F) = 20{,}825 \text{ BTUs/hr}$$

$$\frac{2{,}500\ gal.x\ 8.33\frac{lb}{gal}}{R-100}(50°F) = 10{,}412 \text{ BTUs/hr}$$

Solar Thermal Energy Storage
ΔT, Insulation & Heat Loss cont.

$$\text{BTUs/hr} = \frac{Area}{R\text{-}Value}(\Delta T) \text{ x 24 hr. = BTUs/day}$$

$$\frac{6{,}000\ gal.x\ 8.33\frac{lb}{gal}}{R\text{-}150}(100°F) = 33{,}320 \text{ BTUs/hr}$$

$$\frac{4{,}000\ gal.x\ 8.33\frac{lb}{gal}}{R\text{-}150}(100°F) = 22{,}213 \text{ BTUs/hr}$$

$$\frac{4{,}000\ gal.x\ 8.33\frac{lb}{gal}}{R\text{-}200}(100°F) = 16{,}660 \text{ BTUs/hr}$$

$$\frac{2500\ gal.x\ 8.33\frac{lb}{gal}}{R\text{-}150}(100°F) = 13{,}883 \text{ BTUs/hr}$$

$$\frac{2500\ gal.x\ 8.33\frac{lb}{gal}}{R\text{-}200}(100°F) = 10{,}412 \text{ BTUs/hr}$$

$$\frac{6{,}000\ gal.x\ 8.33\frac{lb}{gal}}{R\text{-}200}(50°F) = 12{,}495 \text{ BTUs/hr}$$

$$\frac{4{,}000\ gal.x\ 8.33\frac{lb}{gal}}{R\text{-}200}(50°F) = 8{,}330 \text{ BTUs/hr}$$

$$\frac{4{,}000\ gal.x\ 8.33\frac{lb}{gal}}{R\text{-}250}(50°F) = 6{,}664 \text{ BTUs/hr}$$

$$\frac{2{,}500\ gal.x\ 8.33\frac{lb}{gal}}{R\text{-}200}(50°F) = 5{,}206 \text{ BTUs/hr}$$

$$\frac{2{,}500\ gal.x\ 8.33\frac{lb}{gal}}{R\text{-}250}(50°F) = 4{,}165 \text{ BTUs/hr}$$

Solar Thermal Energy Storage
ΔT, Insulation & Heat Loss cont.

$$\text{BTUs/hr} = \frac{Area}{R\text{-}Value}(\Delta T) \text{ x 24 hr.} = \text{BTUs/day}$$

$$\frac{2000\ gal.x\ 8.33\frac{lb}{gal}}{R-60}(80°F) = 22{,}213 \text{ BTUs/hr}$$

$$\frac{2{,}000\ gal.x\ 8.33\frac{lb}{gal}}{R-60}(50°F) = 13{,}833 \text{ BTUs/hr}$$

$$\frac{1{,}500\ gal.x\ 8.33\frac{lb}{gal}}{R-100}(80°F) = 9{,}996 \text{ BTUs/hr}$$

$$\frac{1{,}500\ gal.x\ 8.33\frac{lb}{gal}}{R-100}(50°F) = 6{,}247 \text{ BTUs/hr}$$

Solar Thermal Energy Storage
ΔT, Insulation & Heat Loss cont.

Though total heat capacity is diminished substantially, smaller concrete cisterns, higher insulation, and lower ΔT makes the concept of thermal batteries practical and affordable in terms of coping with heat loss using a moderately sized (200 sqft) solar thermal collector system.

Based on <4 hr. sun days, on a bright and sunny Fall or Spring day in Boise, ID, a 200 sqft solar thermal collector can produce ~283,600 BTU/day. After subtracting 24 hr. of heat loss (199,920 BTU/day), for a 2,000 gal. concrete cistern with R-60 insulation, there is a net gain of 83,680 BTU/day for the thermal battery. That amounts to 30.5 MMBTU annually comprised of 100°F hydronic heating water plus pre-heating of DHW. A 1,500 gal. cistern with R-100 insulation and a ΔT of 50°F reduces heat loss to 149,940 BTUs/day, providing a net gain of 133,660 BTUs/day or 50 MMBTU annually.

Thermal Energy Storage Strategy

- Concrete cisterns can serve as a thermal battery, as a solar thermal drainback tank, and as a buffer tank.
- For water temperature ranging from 50-200°F, an R-100 insulated 1,500 gal. cistern can store 1.874 MMBTU minus 1°F/day heat loss. That is sufficient to meet the modest hydronic requirements for a radiant floor heating system plus provide DHW for about 48 hr.
- For water temperature ranging from 50-100°F, an R-60 insulated 1,500 gal. cistern can store 625 kBTU minus 1°F/day heat loss. That is sufficient to meet the modest hydronic requirements for a radiant floor heating system plus provide DHW for <24 hr.

Thermal Energy Storage Strategy cont.

- For water temperature ranging from 50-200°F, an R-100 insulated 4,000 gal. cistern can store 5 MMBTU minus 1.8°F/day heat loss. That is sufficient to meet the modest hydronic requirements for a radiant floor heating system plus provide DHW for about 144 hr., or 6 cloudy days.
- For water temperature ranging from 50-100°F, an R-60 insulated 4,000 gal. cistern can store 1.67 kBTU minus ~1°F/day heat loss. That is sufficient to meet the modest hydronic requirements for a radiant floor heating system plus provide DHW for well over 48 hr.
- By using cylindrical shaped cisterns and strategically reducing the surface area of the concrete cisterns exposed to the 50°F soil, the rate of heat loss may be reduced by as much as an additional 38%, e.g., to less than 1°F/day.

High Thermal Mass & Energy Storage 50% Reduction in Solar Collectors

- High thermal mass construction such as ICF/concrete structures (external and internal walls, floors and vaulted ceiling), radiant heating and cooling systems that minimize ΔT, ground to air heat exchanger and 97% efficient ERV/HRV, and super-insulated seasonal energy storage can conserve up to 50% of the energy required to heat the structure.
- This could reduce the size of the solar thermal collector system by 50% without affecting the performance of the space heating or DHW systems.

Strategic Design & Location

- Sizing dimensions to reduce surface area exposed to the soil and placing the concrete cistern/thermal battery directly under the basement mechanical/utility room allows for optimizing net energy gain for solar thermal systems.
- For example, a 2400 gal concrete cistern/emergency water supply with dimensions 6.3’x10.2’x5’ has a thermal capacity of 1 MMBTU.
- With a 200 ft.^{2} solar collector, a 50°F ΔT, and R-100 insulation (with an annual heat loss of 59 MMBTUs), this solar thermal battery system could recharge daily to annually produce a net gain of over 46.5 MMBTUs.

Cylindrical Concrete Cistern

- A 1500 gal. cylindrical concrete cistern 8’ diameter and 3.99’ deep requires 3.72 yd of concrete for 6” walls. Based on ΔT 50°F and R-100 insulation, it would have an annual heat loss of 41 MMBTU. Based on a 200 ft^2 solar thermal collector system, it would annually produce an annual net gain of 62.5 MMBTU.
- A 2000 gal. cylindrical concrete cistern with 8’ diameter and 4.03’ deep requires 4.93 yd of concrete for 6” walls. With same ΔT 50°F and R-100 insulation it would have an annual heat loss of 54.8 MMBTU. The same 200 ft^2 collector would produce an annual net gain of 48.7 MMBTU.
- Hence, in these cases there is little advantage to the circular design, particularly in regards to increased labor and materials unless these tanks cane be purchased from a precast manufacturer.

Hot & Cold Water Buffer Tanks

- Uninsulated concrete cisterns can also be used for storage of cold water since ground temperature at about 16’ is around 55°F.
- Similar to solar thermal storage, the cold water concrete cistern could be placed ~20” from the insulated thermal battery and geothermal field loops so as to reduce thermal bridging.
- These hot and cold water concrete cisterns could then be used as buffer tanks for the integrated GSHP/ERV.
- The water levels of both concrete cisterns could be maintained with rainwater from the roof of the structure.

GSHP & Geothermal Field Loop Integration

- Higher ΔT during the summer could result in increasing both the gross heat loss and the net gain for the above solar thermal energy systems.
- This is particularly true if the solar thermal systems are used in conjunction with the supply side of a GSHP and using the geothermal loop field as a heat dump via drip lines that also keep the field loops hydrated/charged.

HDPE & PEX Temperature Maximums

- A linear polymer, High Density Polyethylene (HDPE) is prepared from ethylene by a catalytic process. The absence of branching results in a more closely packed structure with a higher density and somewhat higher chemical resistance than LDPE.
- HDPE is also somewhat harder and more opaque and it can withstand rather higher temperatures (120°C/248°F) for short periods of time; 110°C/230°F continuously. At 200°F, a 6,000 gal thermal battery can store 6.5 million BTUs down to 70°F, and 7.75 million BTUs down to 45°F.
- Since water boils at 212°F, operating a solar thermal collector system at a maximum of 200°F and 40 psi should be sustainable using either HDPE or PEX (cross-linked polyethylene) tubing. However, due primarily to the risk of equipment failure, copper or corrugated stainless steel is the best choice for the solar thermal system including all pipes connected to the thermal battery system.

ASME F876 & DIN 4726 PEX Standards

- In addition to HDPE tubing, most PEX tubing used in hydronic applications is manufactured with a special layer called an oxygen diffusion barrier. This layer prevents oxygen molecules from diffusing through the tube wall and reaching the water within the system. This in turn greatly reduces the potential for oxidation corrosion.
- PEX that meets the ASME F876 standard and is equipped with an oxygen diffusion barrier meeting the DIN 4726 standard is commonly used in hydronic systems. It can withstand temperatures as high as 200 °F with simultaneous pressures up to 80 psi. These temperature and pressure numbers are much higher than what would be found in hydronic systems supplied by geothermal heat pumps, but could be ideal for solar thermal systems.

HDPE Oxygen Barrier & Pump Sizing

- The chemical nature of HDPE is such that it inhibits oxygen diffusion, particularly at lower temperatures. Thus it can be used in closed loop geothermal systems in conjunction with cast iron pumps with additives that inhibit oxygen diffusion and oxidation which leads to rusting of cast iron pumps.
- Depending on HVAC system design, emitter flow rates of 6.5 GPM (required for optimizing heat exchange of geothermal loops) and head loss up to 9 ft. allows for economical purchase of circulatory pumps.
- Though ECM circulation pumps are more efficient, for very low energy applications, conventional pumps may provide a better ROI for strategic design of supply and distribution loops for highly efficient HVAC systems.

CO_2 & O_2 Diffusion for HDPE Tubing

Material	Clarity	MVTR*	O_2**	CO_2**	Impact Strength	Recycle Code
PET (Oriented or Stretch Blown Polyethylene Terephthalate)	Excellent	2.0	75	540	Good	1
HDPE (High Density Polyethylene)	Poor	0.5	4,000	18,000	Good	2
PVC (Polyvinyl Chloride)	Good	3.0	150	380	Fair	3
PP (Polypropylene)	Poor	0.5	3,500	7,000	Fair	5
PS (Polystyrene)	Excellent	10.0	6,000	18,700	Poor	6
PLA (Polylactide – Oriented/Stretch Blown bottles)	Very Good	18-22	38-42	201	Good	7

Coping with O_2 Diffusion in HDPE Tubing

- In relatively cool water applications, such as those observed in geothermal applications, the use of HDPE is often considered a closed loop system since oxygen diffusion is substantially inhibited.
- However, oxygen diffusion continues to occur and the decision to use cast iron circulation pumps vs. bronze or stainless steel can eventually result in subsequent oxidation and rusting.
- Film additives which inhibit oxidation and rusting can be used in non-potable water applications.

Water’s Latent Heat of Fusion

- Water is a phase change material. It requires one BTU to move one pound of water one degree in liquid form. However, when water temperatures are lowered to 32°F and the water begins changing phase, it then requires 143.59 BTU/lb. (334 kJ/kg) to convert it into ice.
- This means that a 2,500 gallon water tank (8.33 lb./gal.) has 20,825 BTU/°F storage capacity until it reaches 32°F. At this point it requires removal of an additional 2,967,250 BTU in order to freeze all of the water.
- This is due to the fact that the Thermal Battery’s storage capacity increases by 143.59 fold because of water’s latent heat of fusion. Effectively, in in terms of heat capacity, the water tank increases in size from 2,500 gallons to 358,975 gallons!

Minimizing Delta T

- Regardless of the phenomena associated with the latent heat of fusion and the subsequent 144 fold increase in heat capacity after the temperature of water reaches 32-33°F, the primary objective of any thermal battery system should be to minimize the Delta T of the EWT and LWT for the supply and distribution systems.
- Hence, optimizing the size (sqft) of the solar thermal collectors, oversizing the thermal battery system, and investing in superinsulation of the thermal battery (concrete water tank), may allow for maintaining the temperature of the thermal battery system between 70-200°F (with no concern for freezing in this temperature range).
- Additionally, the thermal battery system can be extended to the geoexchange field loops by regulating the soil temperature between 45-70 °F using excess solar thermal and cold well water or snow-melt run-off via irrigation water depending on the season.

Solar Thermal Recharge Priority

- Though the concept of a thermal battery is appealing for storage of thermal energy, the primary objective of the thermal battery system is to minimize Delta T for EWT and LWT for the supply and distribution loops of integrated HVAC systems.
- Thus, solar thermal energy should be used first and foremost to recharge the drainback tank with DHW coil, secondly to minimize Delta T for the GSHP and buffer tanks, and thirdly to recharge the thermal battery system using excess thermal energy when available.
- A GSHP-Desuperheater subsystem may reduce or eliminate the need for using solar thermal to recharge the drainback tank with DHW coil.

Optimizing Integration & Maintenance

- The key to using alternative energy resources, e.g., passive energy technology, is optimizing integration of solar thermal, geothermal, and solar PV technologies.
- The design of the integrated system must be simplified, provide redundancy, and minimize costs while being robust and dependable.
- Integration of Solar Thermal-ERV-GSHP-Desuperheater systems allows for providing unprecedented production efficiencies.
- State-of-the-art web-based programmable controls with data logging, basic monitoring, and real time diagnostics is essential for conducting routine maintenance and insuring long term operation of each component of integrated systems.

Energy Efficiency of Air vs. Water Transport

- For a given temperature rise, liquid water can absorb ~3,500 times more heat than the same volume of air. Hence, water is substantially more efficient than air as a means of transporting thermal energy.
- A ¾” water pipe can move as much energy as an 18” diameter circular air duct or a 20” x 12” rectangular duct.
- Additionally, in terms of wattage usage, water pumps are 90% more efficient than fan motors for transporting thermal energy.
- In contrast to forced air systems, hydronic-radiant systems allow for more efficiently establishing strategic living area set-points, thus further enhancing HVAC efficiency via zoning.

Density of Water vs. Air

Water is 832 times denser than air.

That means water can capture and channel more energy per unit volume than air.

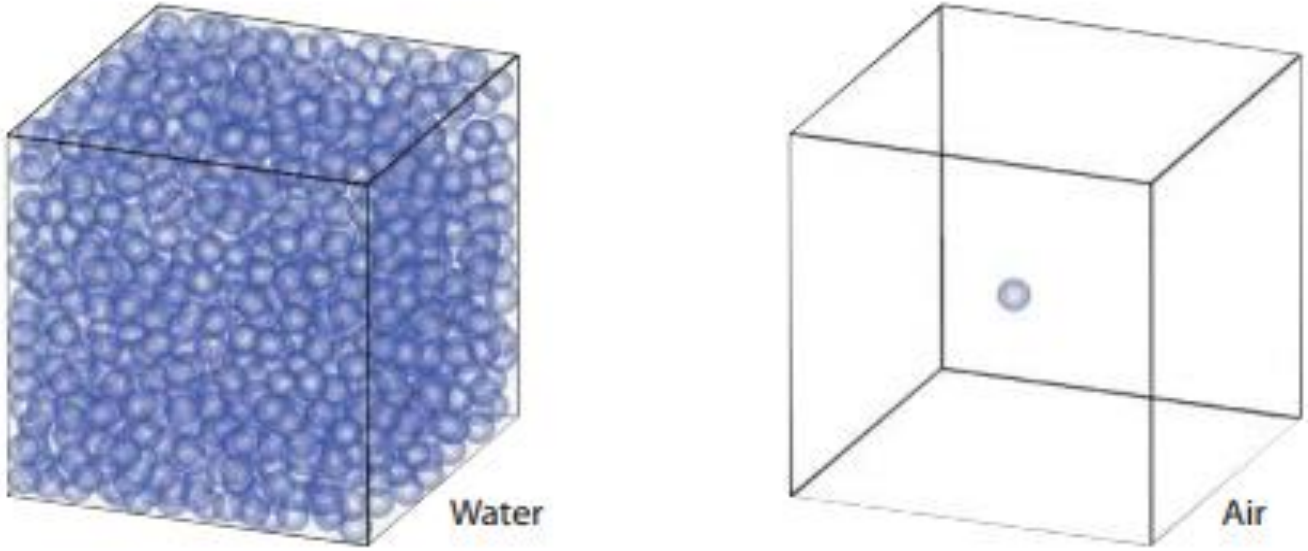

Source: Thermally Active Surfaces in Architecture, K.Moe, Princeton Architectural Press © 2010

Efficiency: Energy Consumption

Material	Specific Heat Btu/lb/°F	Density lb/ft³	Heat Capacity Btu/ft³/ °F
Water	1.00	62.4	62.4
Air	0.24	0.0074	0.018

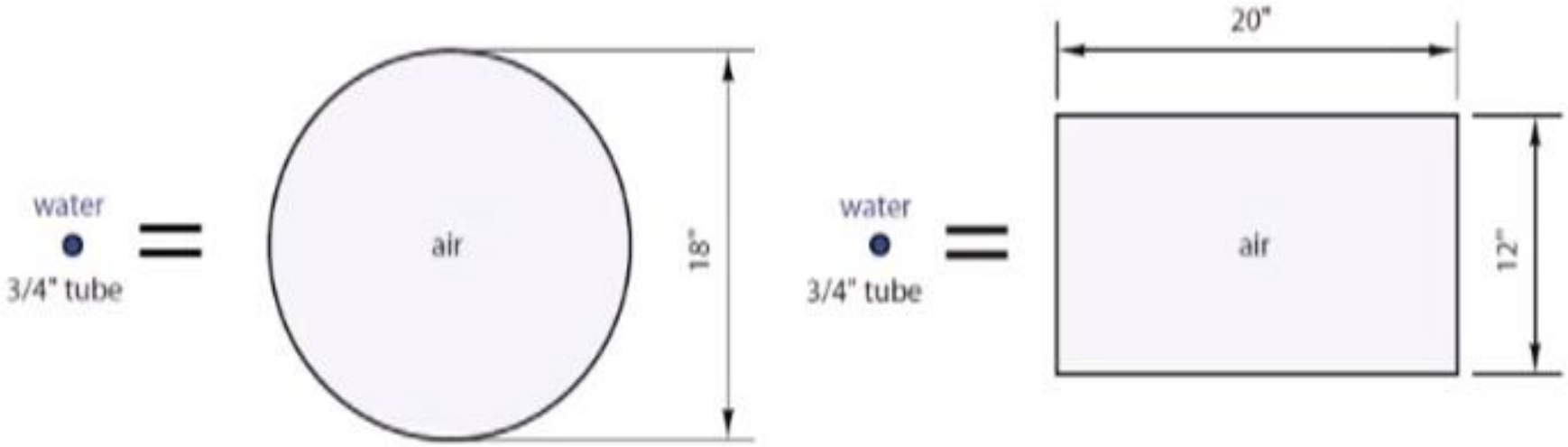

tekmar®

50% Reduction in Energy Consumption

- Though water can store 3,500 times more thermal energy than air, the energy savings is not proportional in terms of HVAC efficiency.
- Water is about three times more efficient than air as a medium for heat transfer via HVAC systems.
- A conservative estimate calls for over-all energy savings of 15-20% compared to traditional forced-air systems.
- However, when hydronic-radiant systems are integrated with forced air systems, two-stage systems can use as little as 50% of the energy typically required for forced air delivery alone (ORNL).

Minimizing Heat Gains

- An all electric input to a cooling distribution system ultimately becomes a heat gain to the building.
- Thus, when high energy efficiency is a primary design goal, it is imperative to minimize the electrical input power required to operate the cooling distribution system.
- Water-to-water GSHPs are ideal for use with hydronic delivery systems in order to optimize efficiency of thermal energy transport by minimizing heat gains.
- Similarly, solar thermal collectors, which are over 70% more efficient than solar PV panels, are substantially more efficient for integration with GSHPs and ERVs than are solar PV panels alone.

GSHP vs. ASHP Technologies

- Ground source heat pumps (GSHPs), sometimes referred to as GeoExchange, earth-coupled, geothermal, or water-source heat pumps, have been in use since the late 1940s.
- They use the relatively constant temperature of the earth as the exchange medium instead of the outside air temperature.
- This allows the system to reach fairly high efficiencies (300% to 600%) on the coldest winter nights, compared to 175% to 250% for air-source heat pumps (ASHPs) on cool days.
- By integrating solar thermal with GSHPs, COPs and EERs could be more than doubled by minimizing Delta T of EWT and LWT.

Concrete Water Tanks as Thermal Batteries

- Concrete provides a relatively inexpensive opportunity to construct water tanks for use as a primary component of thermal battery systems and also as an emergency supply of water.
- Waterproofing can be accomplished by inserting an admix directly into ready mixed concrete prior to pouring (integral waterproofing).
- This is also an ideal technology approach for waterproofing basement walls and floors for continuous concrete construction.
- This waterproofing technology can also be used in decorative concrete floors and concrete countertops, etc., to prevent cracking and reduce maintenance.

Hydrophilic vs. Hydrophobic Technology

- Integral waterproofing systems work within the matrix of a concrete structure, giving the concrete itself a waterproof quality.
- There are two main types of integral waterproofing systems: the hydrophilic and the hydrophobic systems.
- A hydrophilic system typically uses a crystallization technology that replaces the water in the concrete with insoluble crystals. Various brands available in the market claim similar properties, but not all can react with a wide range of cement hydration by-products, and thus require caution.
- Hydrophobic systems use fatty acids and waxes, etc., to block pores within the concrete, preventing water passage.

Waterproofing Concrete Structures

- Concrete is porous. Its tunnel-like capillaries are a natural part of its mass, and permit the passage of water and other liquids.
- Researchers at Xypex recognized the opportunity for a chemical treatment that would fill these capillaries to prevent the penetration of water and other liquids from any direction.
- Basic to the development of Xypex Crystalline Technology was a thorough understanding of concrete's chemical and physical makeup.
- Future integral waterproofing technologies may provide ability to create hybrid blends of densifiers, repellants, and crystalline products that can be strategically used with specific concrete ready mix products for virtually any application.
- This includes fresh water or marine water applications as well as hydrostatic applications for potable water and wastewater treatment plants, etc.

Diffusion via Water as Migrating Medium

- By means of diffusion, the reactive chemicals in Xypex products use water as a migrating medium to enter and travel down the capillaries of the concrete.
- This process precipitates a chemical reaction between Xypex, moisture and both cementitious components and the by-products of cement hydration, forming a new non-soluble crystalline structure.
- This integral structure fills the capillary tracts rendering the concrete waterproof.
- Waterproofed concrete cisterns used as thermal batteries/storage tanks can be located below the basement slab as an added safety precaution to prevent flooding.

Integral Waterproofing Technology

- Integral waterproofing products such as Xypex admixes are marketed under a dozen or more different brand names.
- While the chemical composition of each is slightly different, they all are either densifiers, repellants or crystalline admixtures.
- Densifiers fill the microscopic pores in the concrete matrix to eliminate water infiltration.
- Water repellants make the concrete hydrophobic.
- Crystalline admixtures cause microscopic, water-blocking crystals to seal pores and hairline fractures.

Xypex is Permanent

- Xypex is a unique chemical treatment for the waterproofing and protection of concrete. Manufactured in the form of a dry powder compound, Xypex consists of Portland cement, very fine treated silica sand and various active proprietary chemicals.
- A Xypex application, unlike most other systems, is permanent. The fibrous crystalline growth, due to its unique composition, will not deteriorate under normal conditions. Our children's children will benefit from applications of Xypex installed today.
- Xypex introduces a reactive, dynamic densification process which continues throughout the life of the concrete. Being a permanent enhancement, Xypex will extend the service life of the concrete. Unlike barrier methods, Xypex penetrates and waterproofs the concrete itself - not just the surface. While other products degrade over time, Xypex continues to provide permanent waterproofing and protection of concrete.

Xypex Crystallization – Catalytic Process

- When mixed with water and applied as a cementitious coating, the active chemicals in Xypex cause a catalytic reaction which generates a non-soluble crystalline formation of dendritic fibers within the pores and capillary tracts of concrete. This process permanently seals the concrete against the penetration of water or liquids from any direction.
- The process by which Xypex waterproofs concrete is unique, in that Xypex is a catalyst. This crystalline growth is highly resistant to extreme water pressure from either side of the concrete and also to most aggressive chemicals. Since the process is catalytic, the crystalline structure can reactivate many years after the original application, to seal or re-seal many defects which might occur in the concrete at a later time.

Xypex Ready Mix Application

- Xypex comes in 50 lb. bags at $2.61/lb., or in small containers that are added per yard of concrete for $2.85/lb. as an admix in which it is added as 2% of the cement mix.
- Though Xypex can be applied after pouring, it is best used as an admix in which it can prevent cracking and guarantee waterproofing.
- For a 10 yd ready mix concrete truck, a 7 bag cement mix (94 lb. per bag/yd.) would require 2% of 6,580 lb., e.g., 131.60 lb. of Xypex. This would cost an additional $37.51/yd plus tax, amounting to about $1/sqft for waterproofing an 8” concrete water tank (in comparison to $1.35 sqft for primer and epoxy plus cost of labor for installation).
- The exterior of the concrete could be insulated with rigid EPS and access provided from the basement mechanical room.

Xypex Standard Construction Details

XYPEX PROJECT SPECIFICATIONS & SCHEMATIC DRAWINGS

STANDARD CONSTRUCTION JOINT DETAILS

Not subject to hydrostatic pressure

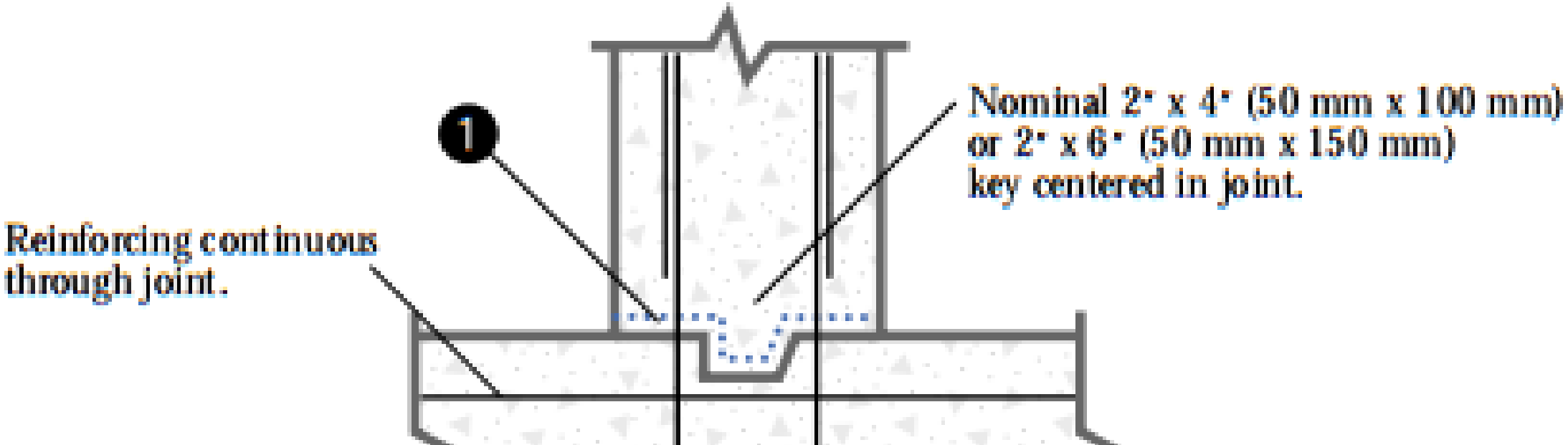

Concrete Wall & Slab – Below Grade

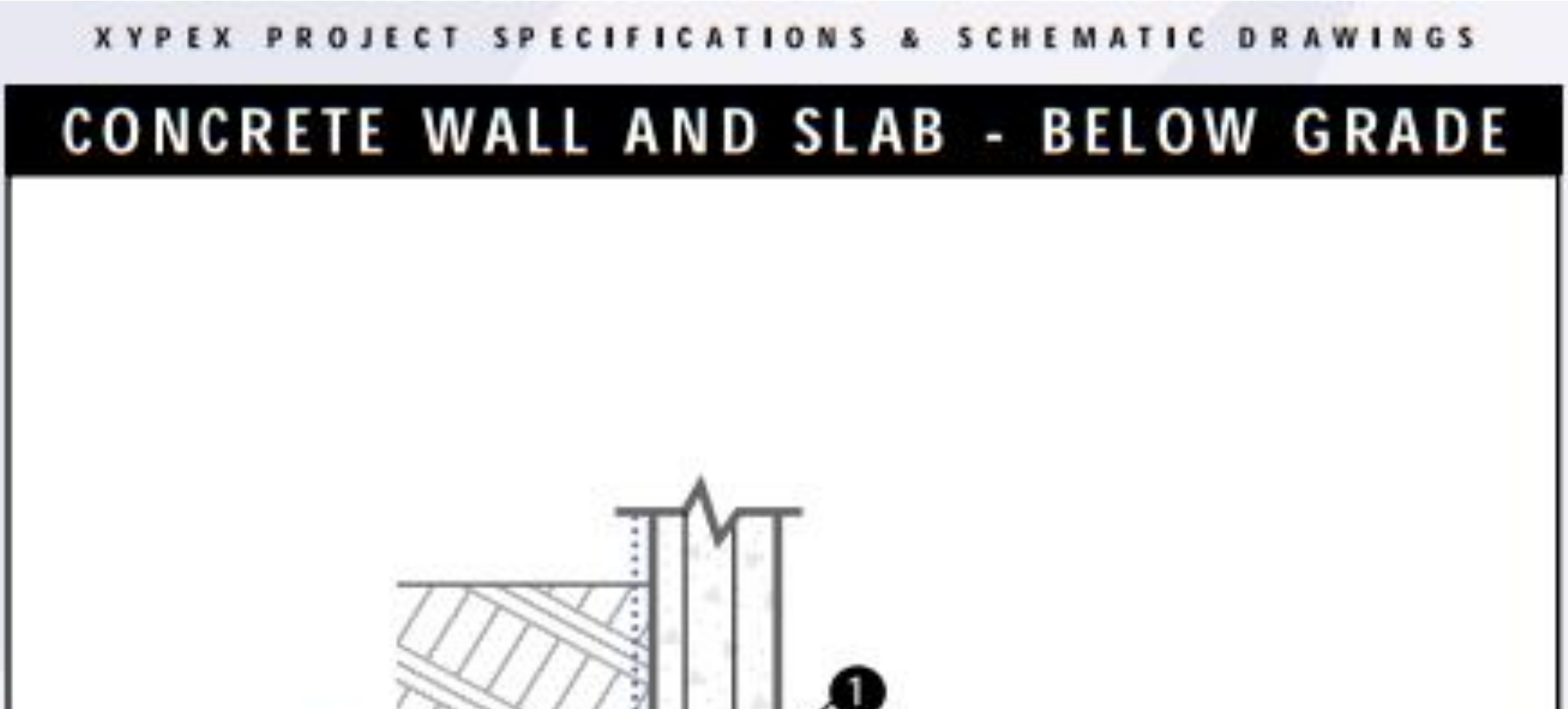

Xypex Vertical & Cold Joint Detail

IMX Technologies

VERTICAL & HORIZONTAL
COLD JOINT DETAIL
FOR USE WITH XYPEX ADMIXTURE

10 YEAR WATER TIGHT WARRANTY

REMOVE 1" x 1 1/2" BLOCK OUT

COMPLETELY WET REGLET AREA AND LET DRY JUST SO MOISTURE SHEEN DISAPPEARS.

APPLY XYPEX CONCENTRATE SLURRY COAT (5-6 SF/LB) TO REGLET AREA AND LET SET UNTIL IT IS DRY TO TOUCH, BUT STILL MOIST GREEN

NOTE:
DO NOT ROUND
OR TROWEL CORNERS

MIX XYPEX 80/20 MIX FOR DRY-PAC 6:1 (6 PARTS XYPEX 80/20 MIX WITH 1 PART WATER) BY VOLUME TO A LUMPY DRY CONSISTENCY.

1"

HAMMER PACK TIGHTLY INTO REGLET AREA WITH A HARDWOOD 1x4 AND SMALL SLEDGE HAMMER

Waterproofing Pipes in Concrete

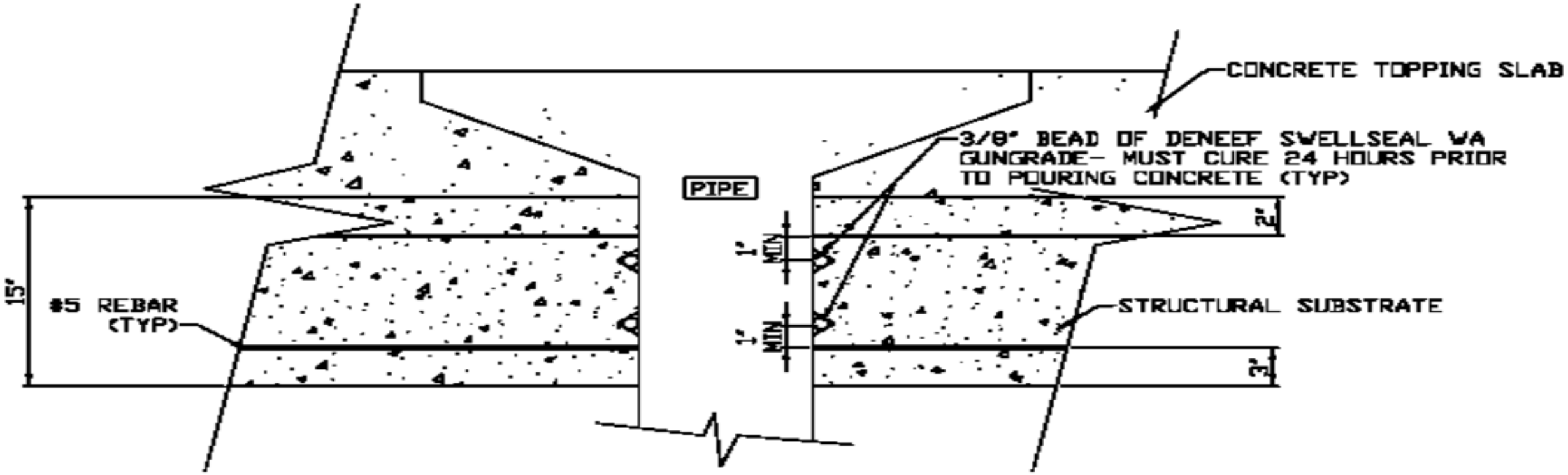

NSF/ANSI Standard 61 (NSF-61)

- For emergency water storage, Xypex products are NSF-61 certified for storing potable water.
- NSF 61 is a set of national standards that relates to water treatment and establishes stringent requirements for the control of equipment that comes in contact with either potable water or products that support the production of potable water.
- The tests vary from a basic cold water test using water at different pH levels, to the more challenging chemical certification. In all cases the equipment is tested before and after exposure to a given fluid to determine whether anything has been leached out or extracted from the equipment.
- NSF-61 was developed by the National Sanitation Foundation (NSF), a global independent public health and environmental organization, and the American National Standards Institute (ANSI), which oversees the consensus for developing standards for manufacturing and procedures in the United States.

Water & Soil Geoexchange

- Water is at least three times more efficient at exchanging thermal energy than is air or soil.
- A moist clay soil or water saturated sandy soil is substantially more efficient for use in geoexchange systems than dry sandy soils.
- Essentially, due to it’s relatively high heat capacity and thermal conductivity, water substantially increases both the heat capacity and thermal conductivity of the soil, making it more efficient and more responsive than dry soils which commonly decrease energy efficiency of GSHP systems.
- Thus, water saturated (hydrated or charged) sandy soil has the potential to mimic the geoexchange rate provided by static pond water.

Heat Capacity & Thermal Energy Transfer

- The ability of soils to store and release thermal energy is based on the physical properties of thermal conductivity and thermal diffusivity, both of which are determined by soil composition and water content.
- In physics, thermal conductivity (often denoted k, λ, or κ) is the property of a material to conduct heat. It is evaluated primarily in terms of Fourier's Law for heat conduction.
- Heat transfer occurs at a higher rate across materials of high thermal conductivity than across materials of low thermal conductivity. Correspondingly materials of high thermal conductivity are widely used in heat sink applications and materials of low thermal conductivity are used as thermal insulation. Thermal conductivity of materials is temperature dependent.
- In heat transfer analysis, thermal diffusivity (usually denoted α but a, κ, k, and D are also used) is the thermal conductivity divided by density and specific heat capacity at constant pressure. It measures the ability of a material to conduct thermal energy relative to its ability to store thermal energy.

Thermal Conductivity & Diffusivity of Soils

Thermal Conductivity and Diffusivity of Sand and Clay Soils

Thermal Conductivity (**k**) - **Btu/hr-°F-ft** and Thermal Diffusivity (α) - **ft²/day**

Soil Type	Dry Density	5% Moist		10% Moist		15% Moist		20% Moist	
		k	**α**	**k**	**α**	**k**	**α**	**k**	**α**
Coarse 100% Sand	120 lb/ft³	1.2-1.9	0.96-1.5	1.4-2.0	0.93-1.3	1.6-2.2	0.91-1.2	-	-
	100 lb/ft³	0.8-1.4	0.77-1.3	1.2-1.5	0.96-1.2	1.3-1.6	0.89-1.1	1.4-1.7	0.84-1.0
	80 lb/ft³	0.5-1.1	0.60-1.3	0.6-1.1	0.60-1.1	0.6-1.2	0.51-1.0	0.7-1.2	0.52-0.90
Fine Grain 100% Clay	120 lb/ft³	0.6-0.8	0.48-0.64	0.6-0.8	0.4-0.53	0.8-1.1	0.46-0.63	-	-
	100 lb/ft³	0.5-0.6	0.48-0.58	0.5-0.6	0.4-0.48	0.6-0.7	0.37-0.48	0.6-0.8	0.41-0.55
	80 lb/ft³	0.3-0.5	0.36-0.6	0.35-0.5	0.35-0.5	0.4-0.55	0.34-0.47	0.4-0.6	0.30-0.45

Coarse grain = 0.075 to 5 mm - Fine Grain less than 0.075 mm

High Thermal Conductivity & Low Thermal Diffusivity

- The ideal soil for geothermal/ground loops is a soil of high thermal conductivity and low thermal diffusivity (high heat capacity) so that heat transfers quickly and the soil has a lot of thermal storage capability.
- With 40% porosity, coarse sand can hold up to 40% water. Water has a relatively high heat capacity and medium thermal conductivity which is ideal for use in a thermal battery system.
- Whereas air has a thermal conductivity of 0.024, water increases thermal conductivity by 23 fold, e.g., to 0.563 BTU/hr-°F-ft. At 20% moisture sand has a thermal conductivity of 1.4 to 1.7 BTU/hr-°F-ft.
- A hydrated sand bath surrounded by a clay soil could allow for optimizing thermal conductivity and thermal diffusivity, particularly in conjunction with regulating soil moisture and temperature.

Thermal Conductivity of Hydrated Sand

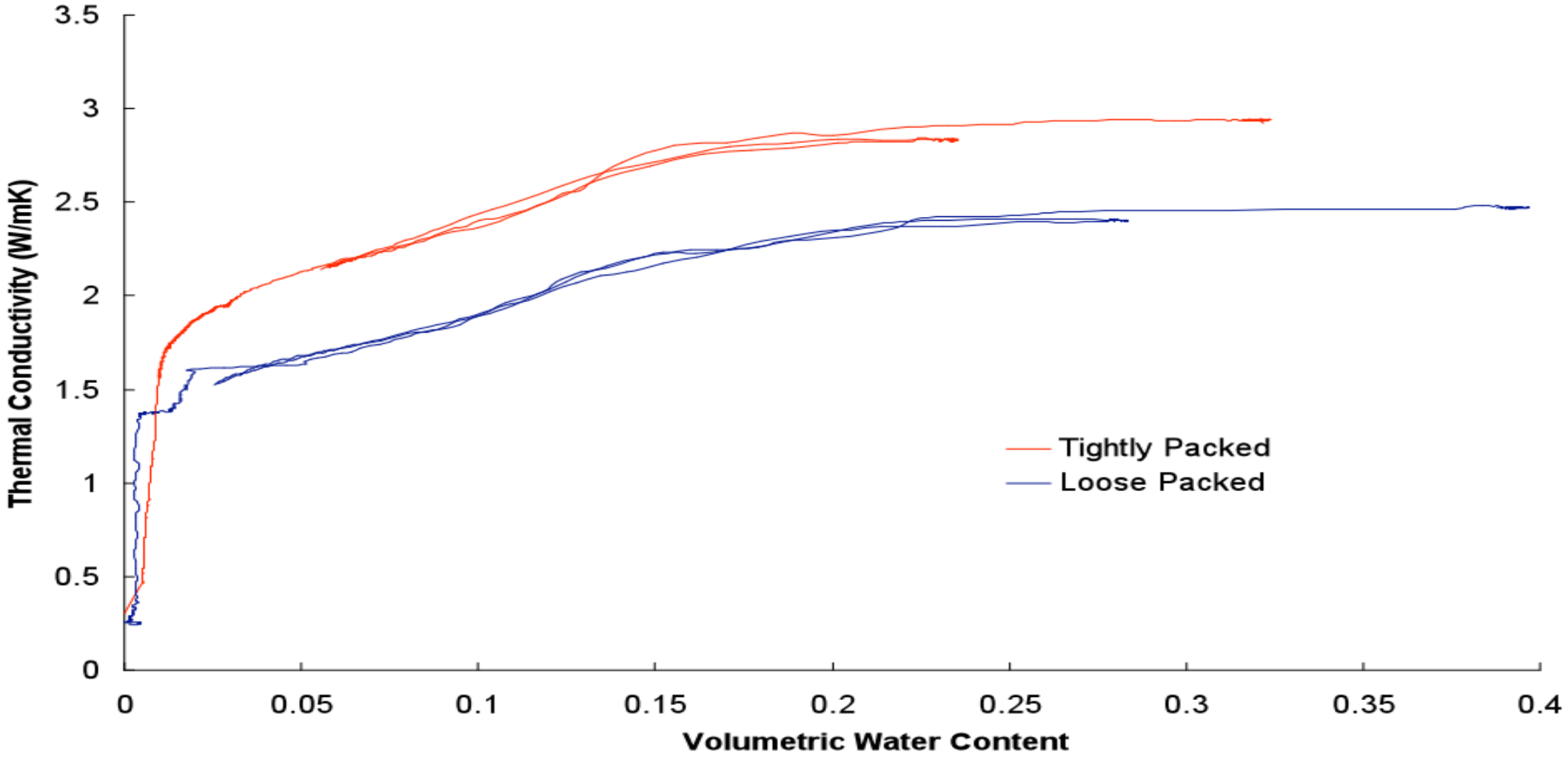

Installation of Hydrated Sand Baths & Slinky Coil Loops in Footing Trenches

- Even though the installation price of a geothermal system can be several times that of an air-source system of the same heating and cooling capacity, the additional costs are returned to the owner in the form of energy savings within 5 to 10 years. For integrated systems ROI can be reduced to less than 5 years.
- System life is estimated at 25 years for the inside components and 50+ years for the ground loop. There are approximately 50,000 geothermal heat pumps installed in the US each year.
- For strategic installation of field loops around the footings of a structure, installation costs of GSHPs can be reduced by over 50%.
- By oversizing geothermal field loops using inexpensive slinky coils and hydrated sand baths, concerns for adverse effects of an earth-coupled basement can be minimized.

Hydrated Sand Baths

- In contrast to 100% fine grain clay soil with 20% moisture content and 0.6 to 0.8 BTU/hr-°F-ft thermal conductivity, hydrated sand baths provide 40% porosity with a thermal conductivity of 1.4 to 1.7 BTU/hr-°F-ft at 20% moisture.
- This results in more than doubling thermal conductivity using sand baths at 20% moisture. If the moisture content is increased to 40%, this should effectively double the thermal conductivity of the hydrated sand bath.
- Moisture and temperature sensors in sand baths allow for effectively regulating thermal conductivity using valve controls and drip lines. This innovative approach can provide unprecedented energy efficiency via water to water GSHPs.

Optimal Moisture & Temperature

- Interestingly, tightly packed sand increases thermal conductivity of soils.
- Though increasing moisture levels to 25% substantially increases thermal conductivity, subsequent increases in moisture up to 40% has a nominal effect on thermal conductivity while slightly decreasing diffusivity.
- Increasing soil temperature from 50°F to 70°F could substantially increase thermal conductivity of hydrated sand, but would also increase thermal diffusivity, resulting in decreasing heat capacity.
- Heat capacity of hydrated sand baths will be about 75% less than pure water bath as sand holds less heat than water. However the increased conductivity offered by the combination of sand and water should make this a worthwhile sacrifice, particularly in conjunction with the heat capacity of the surrounding soil.

Sand Bath Field Loop Design

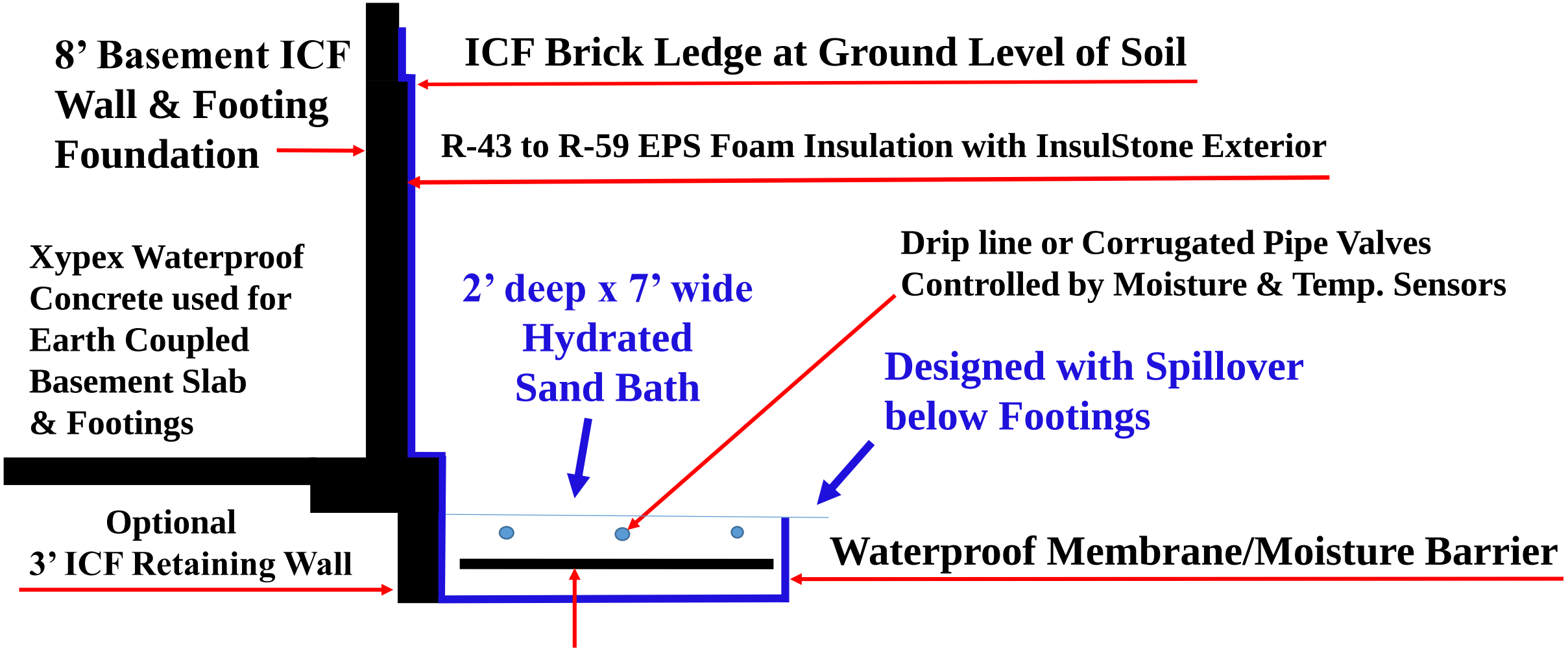

1.25” Tubing – 20’ Pitch - Slinky Coil Field Loops – Providing Geoexchange for GSHP

Less than 25% Reduction in Thermal Capacity

- Since thermal conductivity is regulated by soil moisture levels, strategically installing the hydrated sand bath around the footings of a structure should not significantly decrease the thermal capacity or performance of the geothermal field loops.
- The majority of the soil profile located under a structure does not receive precipitation, nor is it warmed by the sun.
- Thus, the amount of thermal energy available under a structure would be substantially less than the surrounding soil which comprises over 75% of the thermal energy available from the earth.

Strategic Design

- Depending on design of the geothermal field loops and heat exchange system around the footings of a structure, it could have an adverse effect on an earth-coupled basement and draw heat from the structure and the earth under the structure.
- For insulated basement floors it would be interesting to model/determine the effect that geothermal loops could have on heating and cooling the structure vs. an earth coupled basement? Typically, unless the geothermal system is designed to maintain soil temperatures above 60 °F, this could result in cold basement floors for earth coupled systems.
- Though the concept of a hydrated sand bath doesn't increase the thermal energy available in the soil, it can enhance thermal conductivity similar that achieved through installation of slinky coils in a pond. Thus, for strategically designed geothermal field loop and heat exchange systems, there is potential for hydrated sand baths and hydrated soils surrounding the sand baths to substantially enhance responsiveness and load capacity of the geothermal system.

Moisture & Temperature Sensors

- Moisture and temperature sensors could be placed in the hydrated sand baths, or simply use temperature sensors on the supply side of geothermal field loop where it connects to the GSHP.
- Though the latter method wouldn’t provide direct information pertaining to the moisture level of the sand bath, a drop in temperature would indirectly suggest either a drop in moisture and thermal conductivity levels, and/or a drop in the available thermal energy in the soil profile.
- There are obvious advantages in regards to convenience of locating sensors on readily accessible portions of the geothermal system.

Moisture Barrier-Waterproofing Options

- EPRO provides a spray on or roll on rubber-asphalt emulsion application with a vapor barrier included (E-Shield) that is ideal for waterproofing ICF structures below grade for about $1.80/sqft.
- However, a less costly alternative that can be used with waterproof footings is a 15 mil moisture barrier that is essentially waterproof for a cost of $0.15/sqft. This Stego Wrap product has an extremely low permeabilty which exceeds ASTM E 1745 Class A Standards for puncture resistance and is designed for use with basement slabs and ICF structure exteriors (http://www.stegoindustries.com/products/stego_wrap_vapor_barrier.php#sthash.OS42dq72.dpuf).
- For hydrated sand baths the Stego Wrap vapor barrier and waterproofing product should be sufficient while also providing a moisture barrier for the ICF structure.

The American Concrete Institute Committee 302 ACI 302.2R-06 *Guide for Concrete Slabs that Receive Moisture-Sensitive Flooring Materials*

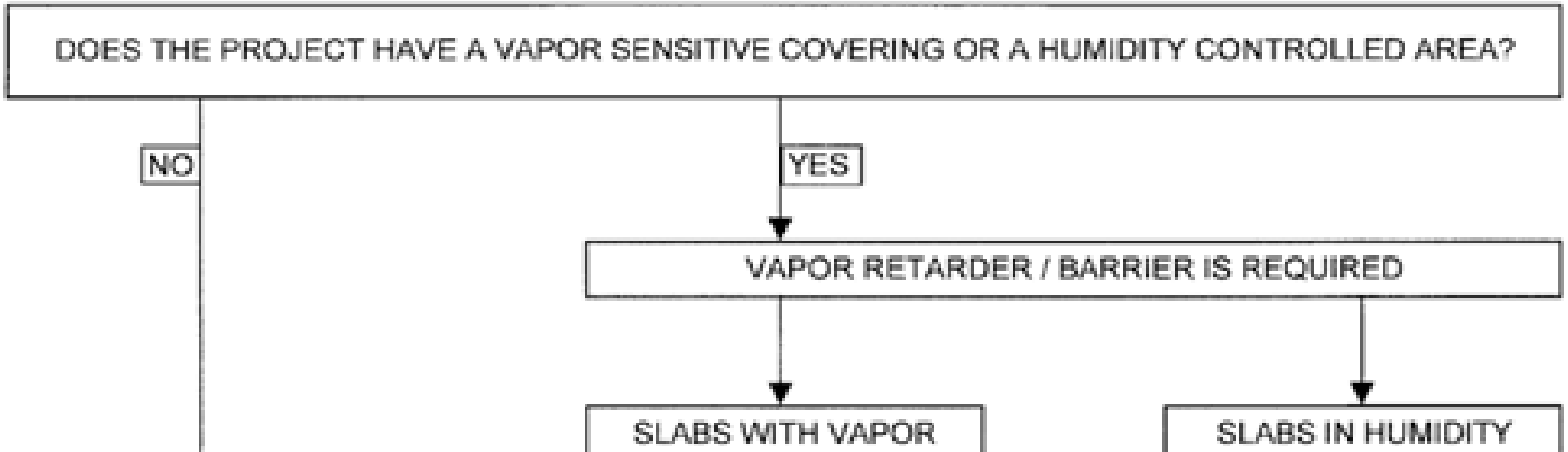

Earth Coupled - Decorative Concrete Floors

- Decorative concrete floors pose little concern for earth coupled systems used in conjunction with basements that are designed to take advantage of the relatively constant temperature of the earth below grade.
- Vapor barriers and waterproof concrete can be utilized in this case without need of a dry granular material.
- The commonly cited advantages of a blotter/cushion layer (less bleeding, shorter time to trowel, less plastic shrinkage cracking, reduced curling) can be achieved just as well by using well-designed mixes with properly graded aggregates and following ACI recommended hot weather concreting practices when necessary.

ACI 302.2R-06: 7.2.2 Benefits of concrete placed directly on vapor barrier

- Research has demonstrated that concrete specimens isolated from a moisture source at the bottom of the specimen dry faster than specimens exposed to water or water vapor at the bottom (Brewer 1965).
- Floor covering and coating installations can thus proceed sooner and at less risk of failure where the concrete slab is placed directly on a vapor retarder.
- If the vapor retarder effectively reduces moisture inflow from external sources, only water in the concrete pores needs to exit the slab. The often-required MVER of 3 lb/1000 ft2/24 h (1.5 kg/100 m2/24h) should be reached faster under these conditions.
- The uncovered vapor retarder may also act as a slip sheet, reducing slab restraint and, thus, reducing random cracking. Placing concrete directly on a vapor retarder also eliminates a potential water reservoir in the blotter layer (Section 7.2.3).

ACI 302.2R-06: 7.2.2 Benefits of concrete placed directly on vapor barrier cont.

- Because more subgrade soil is removed to accommodate the additional 3 to 4 in. (76 to 100 mm) thick blotter layer, that layer is more likely to be placed below the finished grade level, thus increasing the chance of its holding water. Specifiers who require concrete to be placed directly on the vapor retarder cite these advantages:
  - Reduced costs because of less excavation and no need for additional granular material;
  - Better curing of the slab bottom because the vapor retarder minimizes moisture loss;
  - Less chance of floor moisture problems caused by water being trapped in the granular layer; and
  - Less radon gas infiltration.
- These specifiers recommend using a low-*w*/*c* concrete and water-reducing admixtures to reduce bleeding, shrinkage, and curling of concrete placed directly on the vapor retarder. They believe that higher-quality concrete and better curing reduce cracking and produce a better floor.

Athletic Concrete & Waterproof Admixes

- Athletic concrete today is being employed on an increasing basis as a high-performance concrete.
- It is proportioned with a high content of maximum-size coarse aggregate, a combined aggregate gradation meeting ACI guidelines for maximum density, and a low water content.
- Supplementary cementitious materials such as fly ash, slag, and silica fume enhance its durability, impermeability, and long-term strength. High-range and mid-range water-reducing admixtures lower its water content and increase its slump and cement efficiency.
- Compatible waterproofing admixes can be added to the athletic concrete mix in addition to using a moisture barrier underneath the slab.

Admixtures and Aggregates: Key Elements in “Athletic Concrete” Revisited

- Athletic concrete is built on a robust frame of coarse aggregate. It is molded into a lean, muscular frame having high-quality paste, minimal fat (low mortar content), and low water content, and is proportioned to achieve the appropriate water-cementitious materials ratio (w/cm) while providing two-tiered high performance.
- That is, initially, the concrete must have the proper workability, pumpability, finishability, and setting times needed to successfully place, consolidate, and, where required, finish the concrete in a building or other structure.
- Also, the mixture is most importantly high performance in its hardened state where the required long-term durability, minimal cracking and curling, proper finish, and adequate compressive and flexural strengths are achieved.

Optimizing Aggregate Grading

- Optimizing aggregate grading to achieve a high packing density provides several benefits to concrete.
- The mixture will require less cement paste to fill in the voids, and provide the “excess paste” that coat the aggregates and facilitates workability.
- A concrete with the least amount of cement paste will achieve low shrinkage and curling and will generally cost less.
- In addition to the least amount of cement paste, if the concrete has a low w/cm the resulting concrete will be durable, and strong as well.
- However, in general it appears that using a paste content greater than 30% defeats the purpose of optimizing the aggregate grading to minimize the void content. Preferably the paste should be less than 30%, say about 25%. In air entrained concrete, air is part of the paste and so the paste contents of air entrained concrete should be closer to 30%.

Athletic Concrete Reduces Costs

- Athletic concrete is being successfully used on a daily basis by knowledgeable owners, engineers, contractors, and ready mixed concrete producers. The result is significantly increased hardened concrete quality at reduced cost.
- Cost savings with athletic concrete versus conventional concrete achieving similar 28-day compressive strengths average about \$1.00/yd^3 (\$1.30/m^3).
- The use of supplementary cementitious materials, fly ash, slag, and silica fume has also had a positive effect on the environment, enabling the user to conform to the Leadership in Energy and Environmental Design (LEED) program

(http://www.euclidchemical.com/fileshare/elit/KeyElem04.pdf)

Regulating Soil Moisture & Temperature

- Using excess hot water from the thermal battery system, an overflow or float valve could be used to divert thermal energy to the sand baths via the drip lines.
- By monitoring the soil via temperature sensors, the soil temperature could strategically be regulated for both heating and cooling. This is possible in conjunction with solar thermal collectors that produce thermal energy throughout the summer months.
- The thermal battery system is only capable of storing about 10% of the total energy produced by the solar thermal collectors.
- Well water or cool irrigation water can be used to reduce the soil temperature via drip lines and valves controlled by temperature sensors.

Ground-Coupled Heat Pump (GSHP)

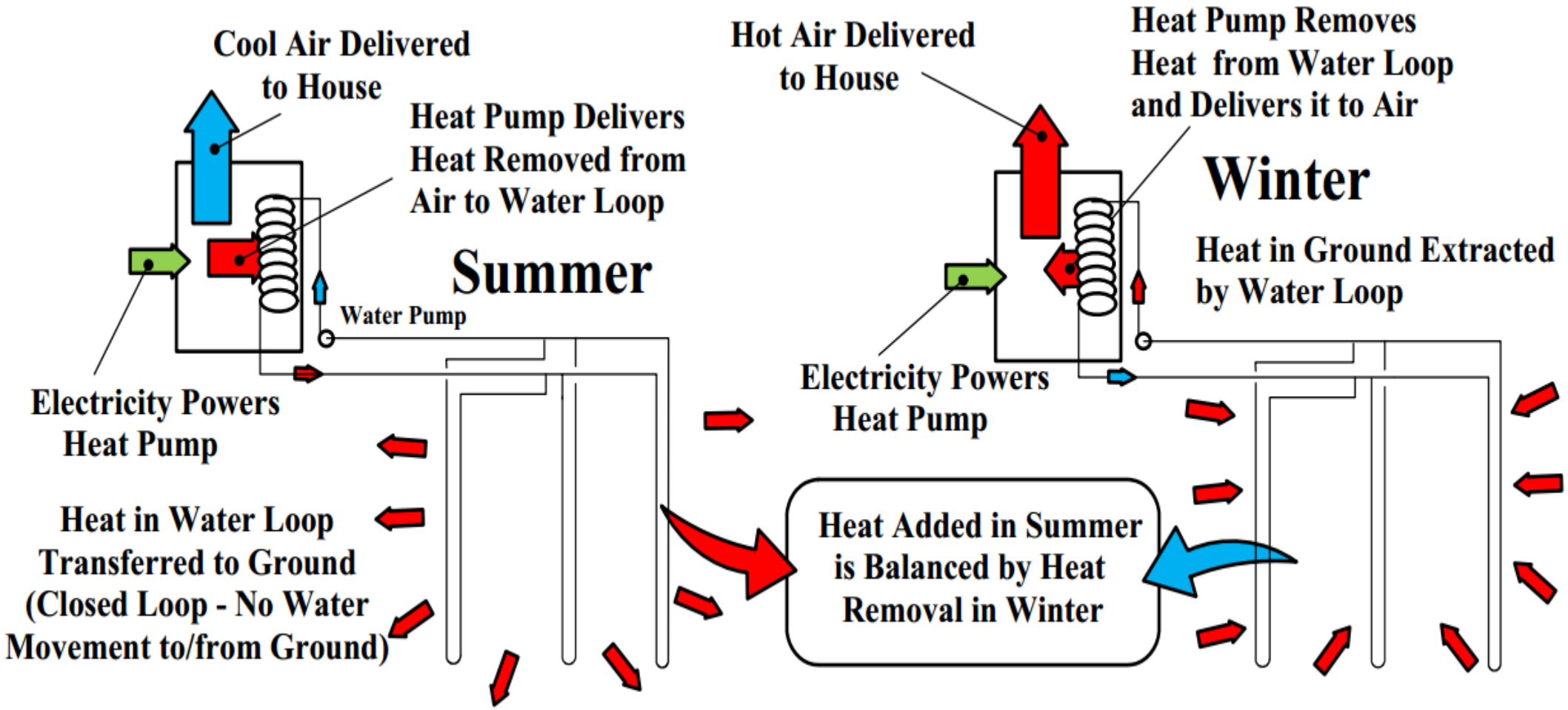

Strategic Design of Thermal Battery System

- When the ground/soil (geoexchange) field loops and ground to air heat exchangers can be used in addition to a concrete water tank as part of a thermal battery system, optimal energy efficiencies can be achieved for Integrated Solar Thermal-GSHP-ERV Systems that can actually balance the thermal battery subsystem while minimizing Delta T for EWT and LWT.
- The strategic use of moisture and temperature sensors in conjunction with solar thermal and cool well water or snow-melt irrigation water to regulate the heat capacity of the soil via hydrated sand baths and water to water GSHPs provides a dynamic system that can assist with optimizing energy efficiencies (COP & EER) during both cool and warm seasons.
- A separate buffer tank, isolated from the concrete tank (thermal battery), could be utilized for the hydronic-air handler cooling subsystem and reduce concerns for transitioning from heating to cooling versus using a single buffer tank for both heating and cooling.

Water-to-Water (Hydronic) Heat Pumps

- One of the most opportune situations for a ground source heat pump (GSHP) is when low-temperature heat can be extracted from a stream of water and higher-temperature heat can be dissipated into another stream of water. Heat pumps configured for such situations are called “water-to-water” heat pumps.
- They can be used in a wide variety of applications for building heating and cooling, as well as applications such as domestic water heating, pool heating or processes where either heated water, chilled water or both are required.
- Water-to-water geothermal/ground source heat pumps (GSHPs) are ideally suited for low energy hydronic applications in order to provide unprecedented energy efficiencies.

Geothermal Energy

- Low Temperature Geothermal Energy is defined as “energy from the internal heat of the earth” from solar energy
  - 47% of the incoming radiation from the sun is absorbed by the earth
  - The remainder of this solar energy is absorbed by the atmosphere or reflected back into space
- Translated: Geo-Thermal means “Earth-Heat”
- “High Temperature” Geothermal Energy
  - Energy Source for Hot springs and geysers
  - Temperatures exceed 300°F
  - Converted to produce useable heat and electricity

“Low Temperature” Geothermal Energy

- Heat Energy contained near the surface of the Earth. Shallow Earth temperatures fluctuate with seasonal outside air temperature.
- Earth temperature becomes more stable with increasing depth. Nearly constant Earth temperatures at depths below 16 feet. Earth mean temperature approaches annual average outside air temperature.
- Deep Earth temperatures start to increase at depths below 400 feet at about 1 °F per 100 feet

Low Temperature Geothermal Energy cont.

- Geothermal Heat Pump Systems
  - Take advantage of “Low Temperature” Geothermal Energy
  - Constant Temperature Year Around for shallow groundwater: 37°F to 77°F at about a 16 ft. soil depth in the Continental US based largely on latitude and elevation
  - Apply a Water Source Heat Pump to “amplify” the heat energy
- AKA
  - Ground Source Heat Pumps
  - Earth Coupled Heat Pumps
  - GeoExchange Systems
  - Well/Ground Water Heat Pumps
  - High Temperature Geothermal

Average Temperature of Shallow Ground Water

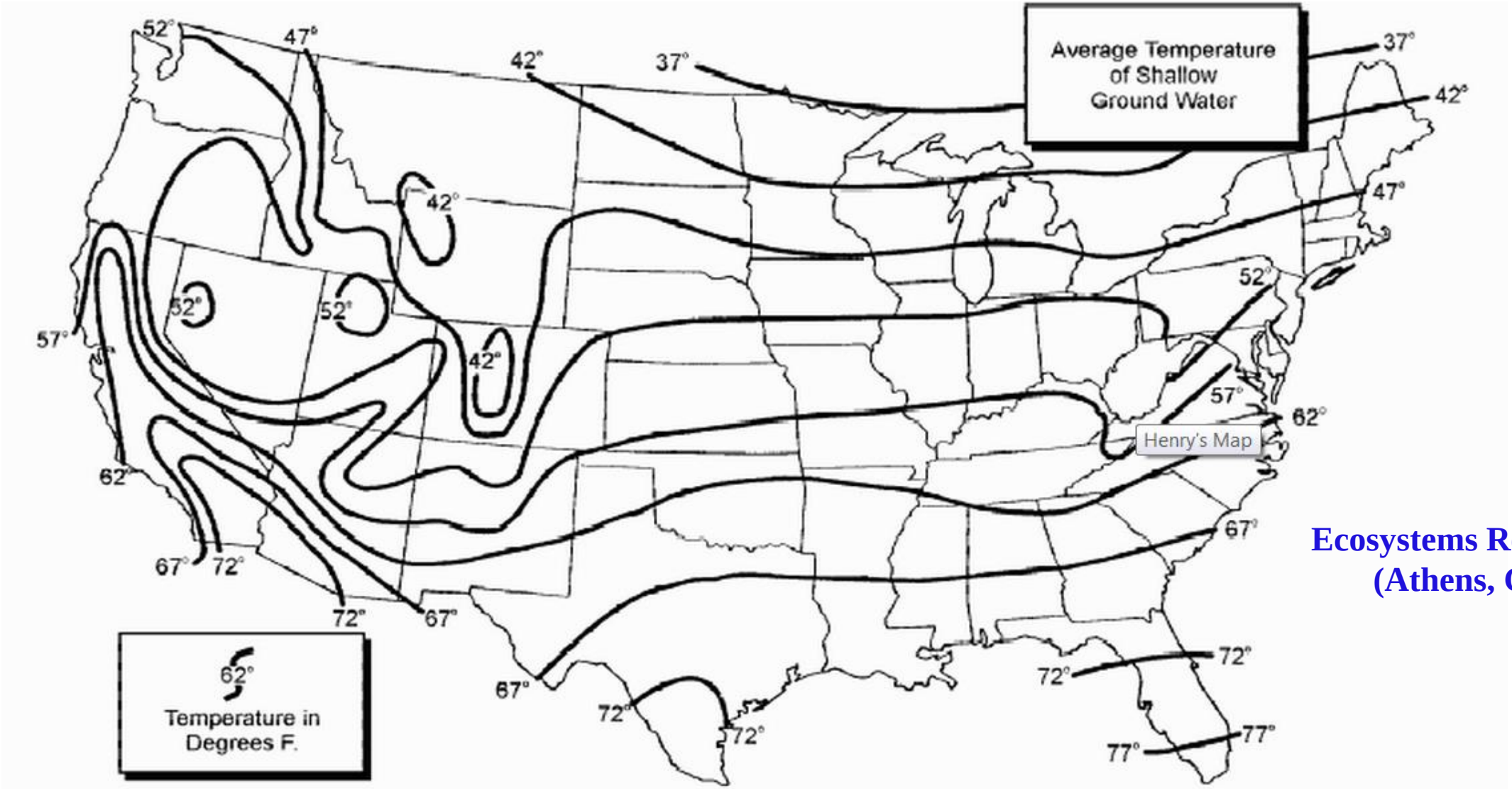

Ecosystems Research (Athens, GA)

Geothermal Heat Pumps

- Characterized by Medium used for Heat Source and Heat Sink
  - Air to Air or Air Source
  - Water to Air or Water Source
  - Water to Water
  - Ground Source (based on groundwater) or Geothermal
- Capable of Heating, Cooling and producing Hot Water
  - Capacity measured in tons
  - One ton of capacity = 12,000 BTU per hour (Cooling or Heating)
  - Typical new home is about 4 – 5 tons of heating capacity and 2 tons cooling
  - Passive House-ZNE Homes require less than 1 ton of heating and cooling

Geothermal Heat Pump System

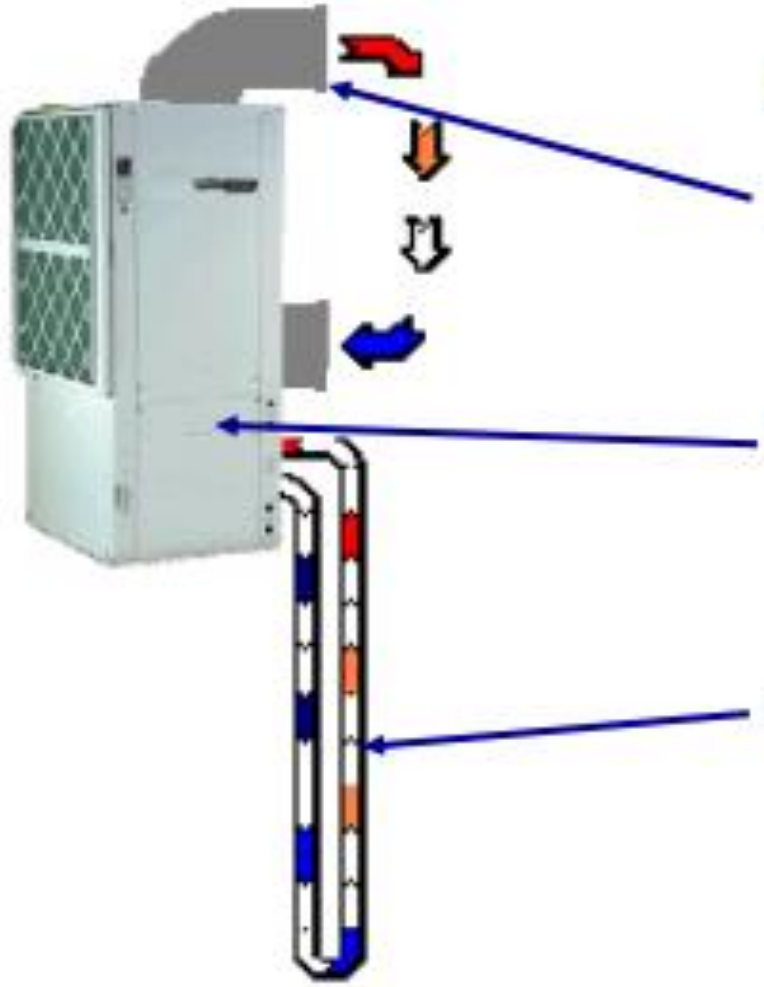

Three Basic Components:

- **Heating/Cooling Delivery System**
  - Traditional Ductwork / Piping system to deliver heat throughout the building
- **Heat Pump**
  - Mechanical Unit that moves heat from the working fluid, concentrates it, and transfers the heat to the circulating air
- **Ground Heat Exchanger**
  - Underground piping system that uses a working fluid to absorb or reject heat from the ground

Geoexchange System Types

- **Closed Loop System**
  - Buried HDPE Piping
  - Underground Heat Exchanger
  - Circulating Fluid contained
  - Exchanges only ***Heat*** with the Ground
  - Various Configurations

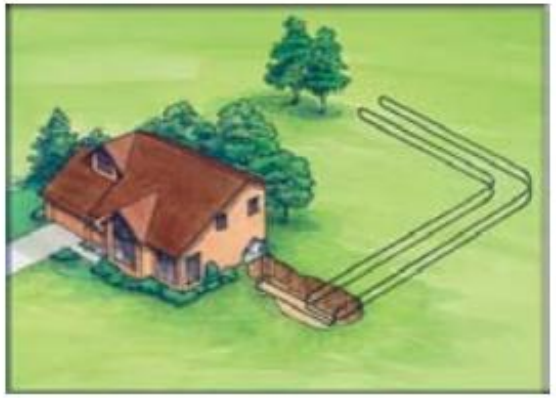

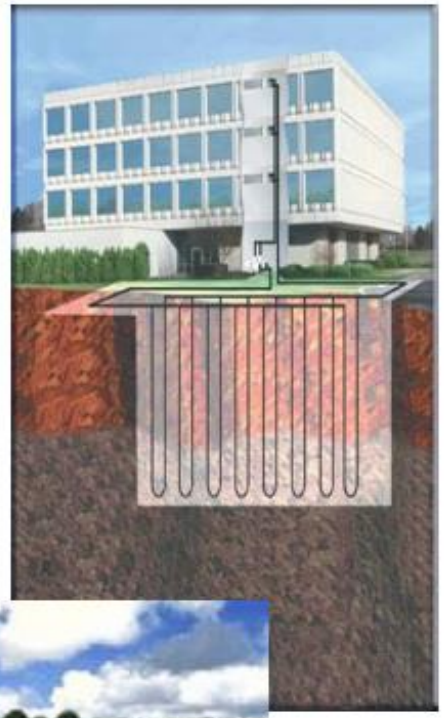

- **Open System**
  - Ground Water from Well
  - Exchanges ***Heat and Water*** with the Ground
  - Returns Water to the Ground

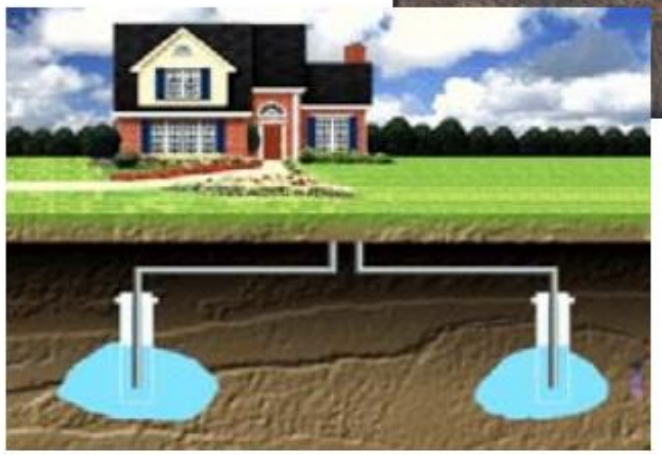

- **Special Systems**
  - City Water Interconnect Systems
  - Hybrid Systems

Horizontal Trench Loop

- Cost effective when land area is plentiful
- Needs 2500 square foot Land area per ton
- Trench depth – Six feet or more

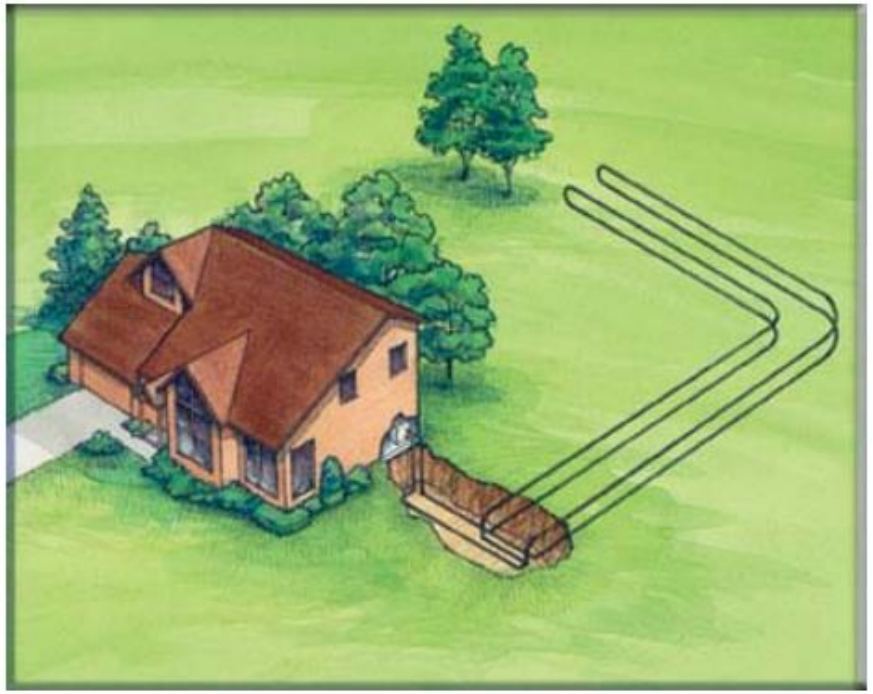

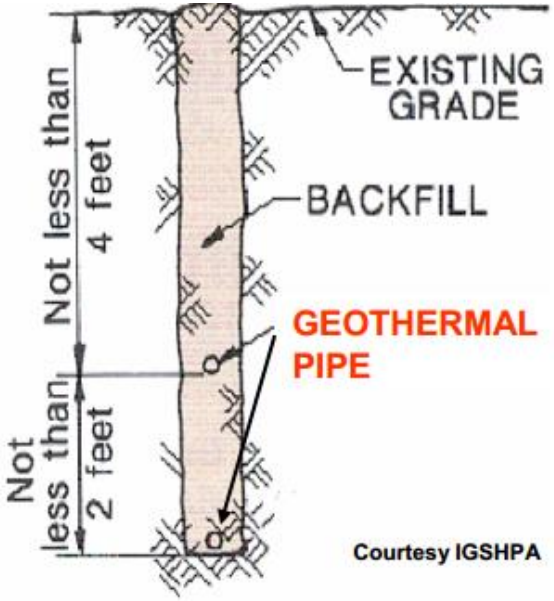

Courtesy IGSHPA

- To Produce 1 ton of capacity:
  - Trench length – typically 300 feet
  - Pipe length – out & back = 600 feet

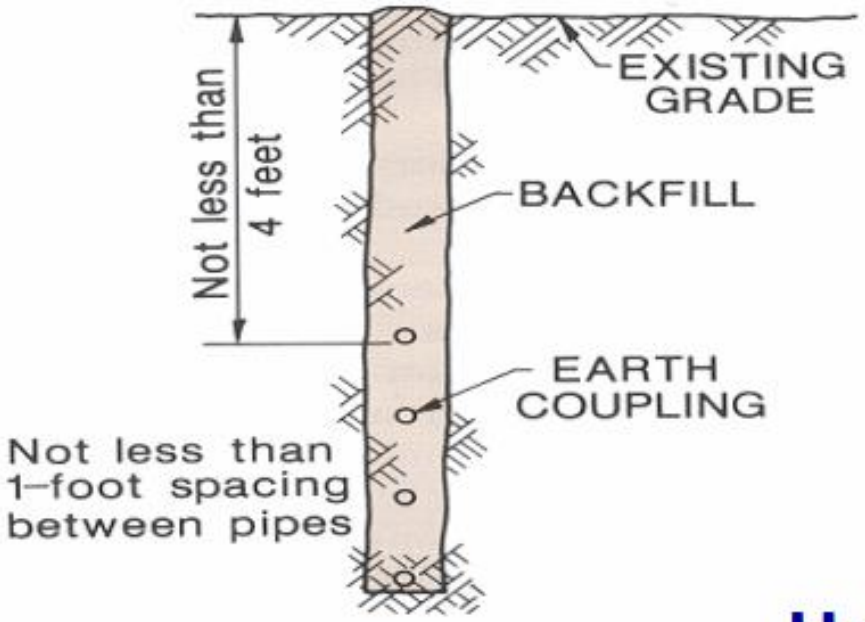

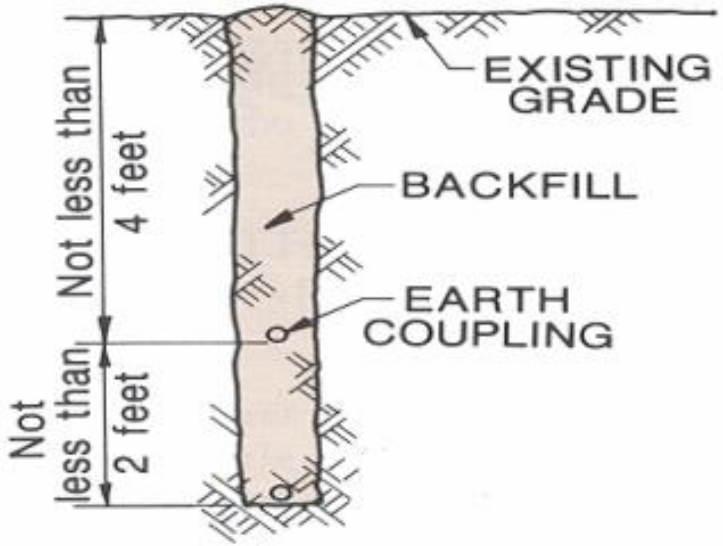

Horizontal Trench Configurations

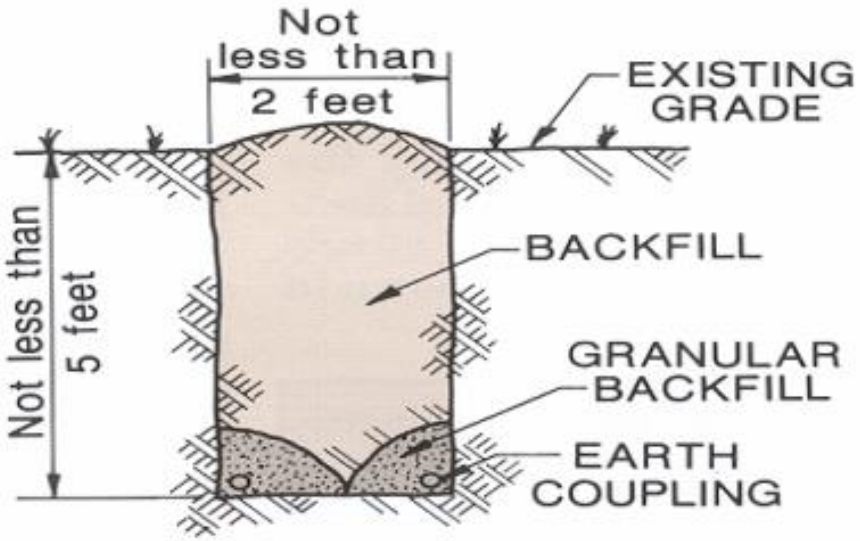

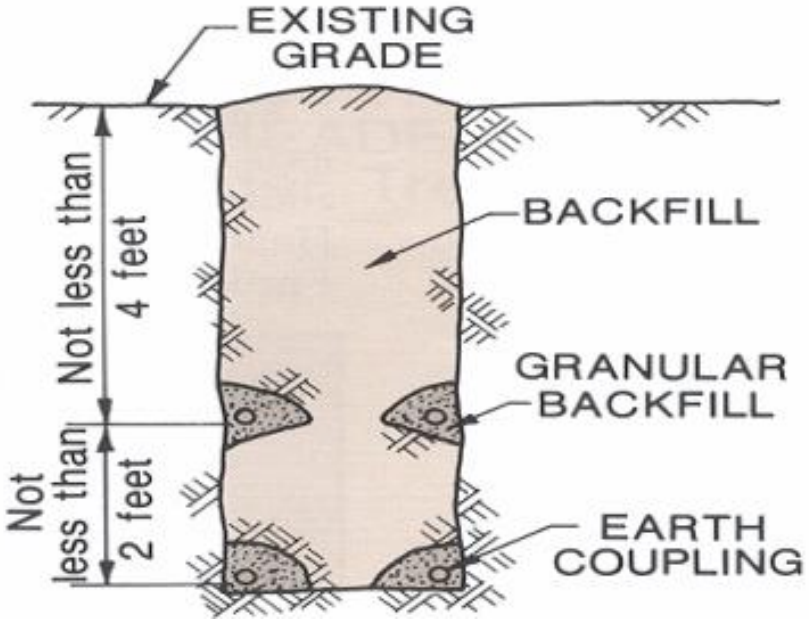

Horizontal Loop

Three Circuits – each with Four Trenches and 4 pipes in each trench

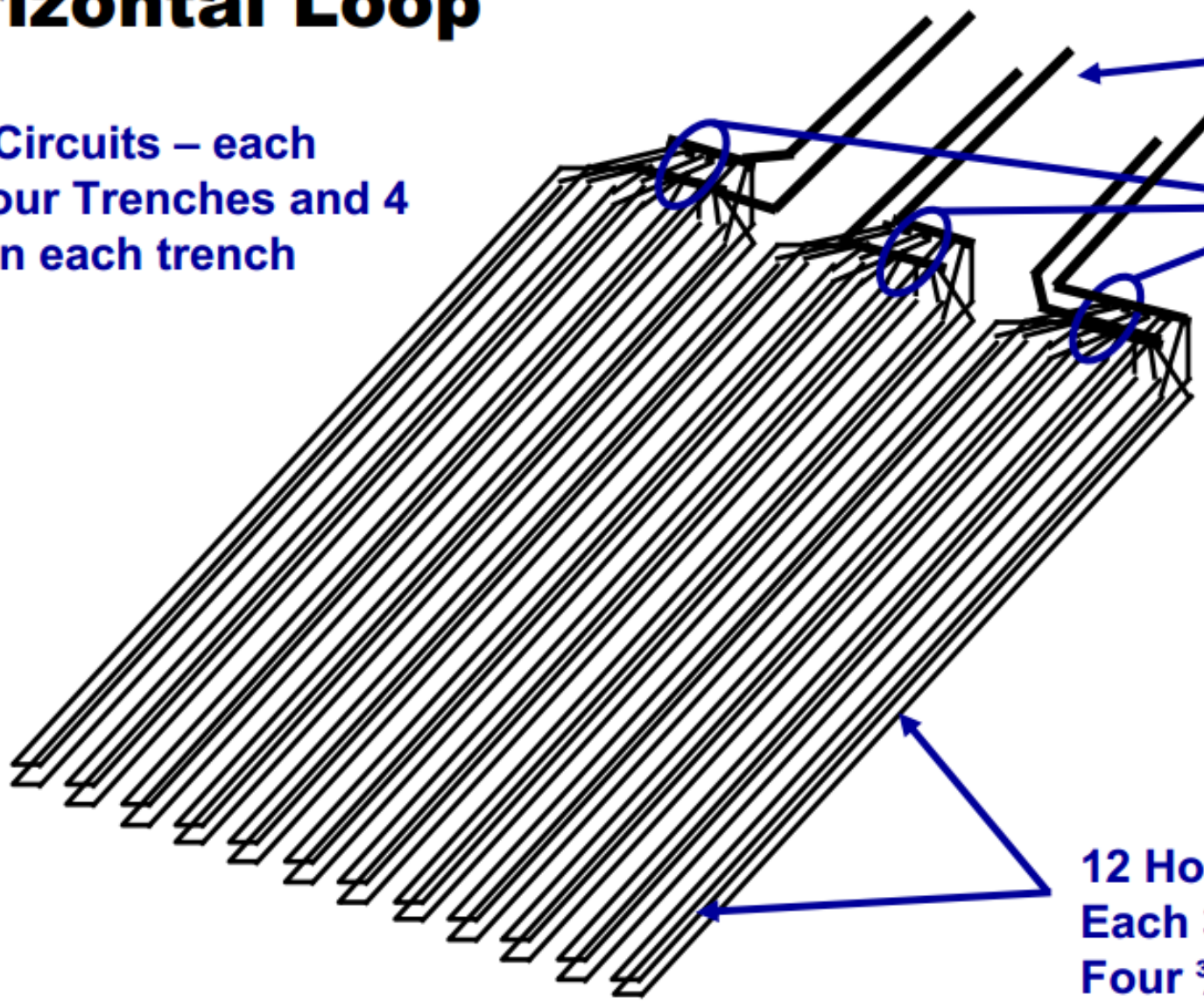

Nominal 24 Ton Configuration

Water & Soil Geoexchange

- Water is at least three times more efficient at exchanging thermal energy than is air.
- A moist clay soil or water saturated sandy soil will be substantially more efficient for geoexchange systems than a dry sandy soil.
- Water saturated (hydrated or charged) sandy soil has the potential to mimic the geoexchange rate provided by static pond water.

Geothermal Emitter - Field Loop or Slinky Loop Flow Rates & Tube Sizes

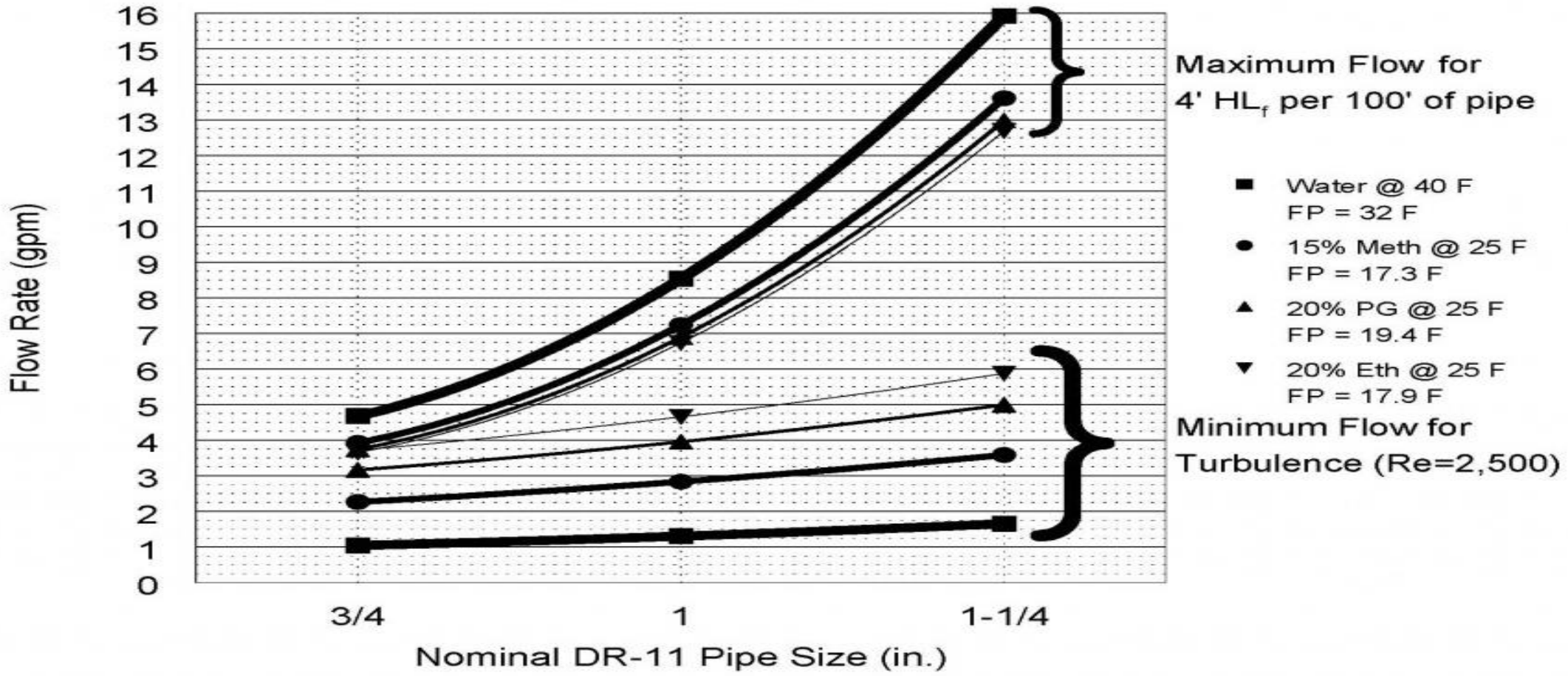

Sand Bath Loop Field

- Installing slinky field loops in a sand bath around the footing of a structure with a moisture barrier in place to protect the structure provides the potential to mimic the geoexchange performance achieved from pond loops.
- This approach using a drip line and moisture sensors connected to an automated control that operates the drip-line valve provides the capability of maximizing geoexchange in almost any soil type.
- Hence, investment in field loop tubing can be minimized, e.g., as little as 400’ of overlapped slinky ¾” tubing per ton of heating or cooling capacity buried at 8-10’ deep should be sufficient for hydrated sand bath applications.

Selection of Tube Size for Slinky Field Loops

- Though 3/4 inch tubing is typically utilized for geoexchange field loops, 1 inch and 1.25 inch tubing are also commonly used and can allow for reducing pipe length depending on the heat exchange capacity of the soil or sand bath.
- Though the 1 inch and 1.25 inch size tubes are more difficult to work with when installing slinky loops, they can be used.
- The larger tubes are advantageous in terms of increasing flow, reducing friction, pump head loss, and electricity used by circulation pumps.
- Designing geoexchange loops with 2 tons per slinky loop allows for reducing the number of field loops and decreasing cost of manifolds.

Slinky Loop

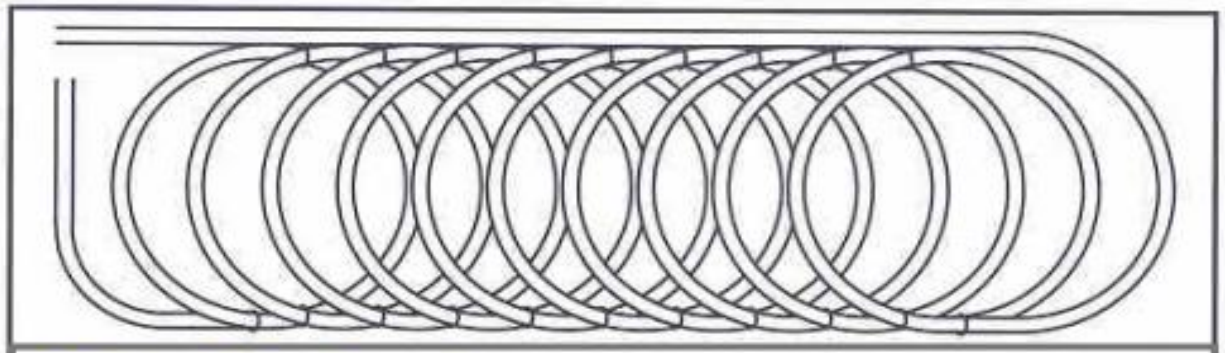

Slinky Coil – Overlap

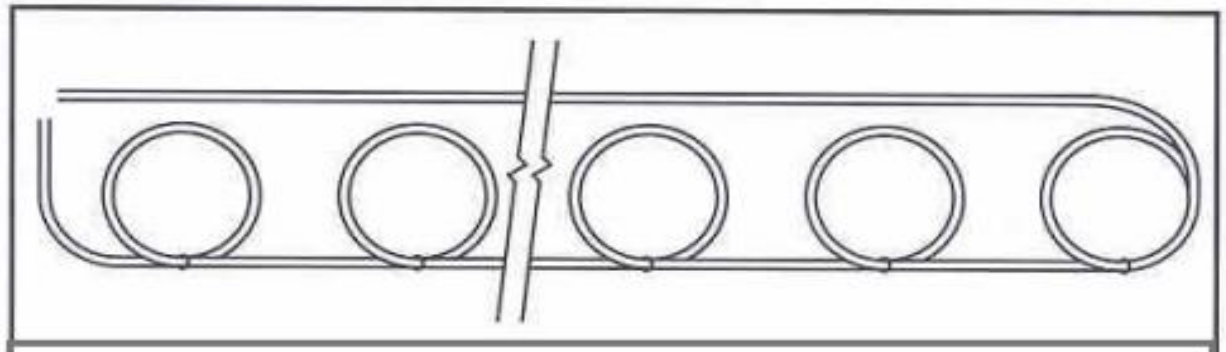

Slinky Coil – Extended

- **To Produce 1 ton of capacity:**
  - Trench length – typically 125 feet
  - Pipe length – out & back = 700 feet

Tube Size & Length of Slinky Loops

- Since the circumference of a circle = πd (3.1416 x Diameter of 6 ft.) = 18.8496 ft. per slinky coil.
- Based on heat exchange using 0.75 inch tubing, about 400 ft. would be required per ton of heating and cooling capacity for hydrated/charged soils. With a 24 inch overlap of coils, that would require only 20 ft. of slinky loops per ton.
- Depending on the heat exchange of the soil and system design, 1.25 inch tubing could reduce the slinky loops to as little as 10 ft. per ton.
- 200 ft. of 1.25 inch tubing comes in about a 5-6’ diameter rolls. 7’ footing trenches would allow for stretching the slinky coils out an tying them in place using a 6-7’ trench next to the footings.

Slinky Coil Pitch (ft. of tubing/ft. of trench)

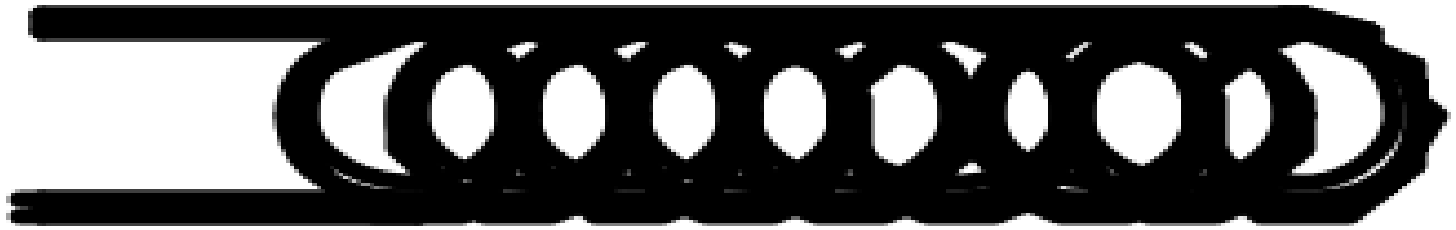

6' Diameter Coil – 40 Pitch Slinky

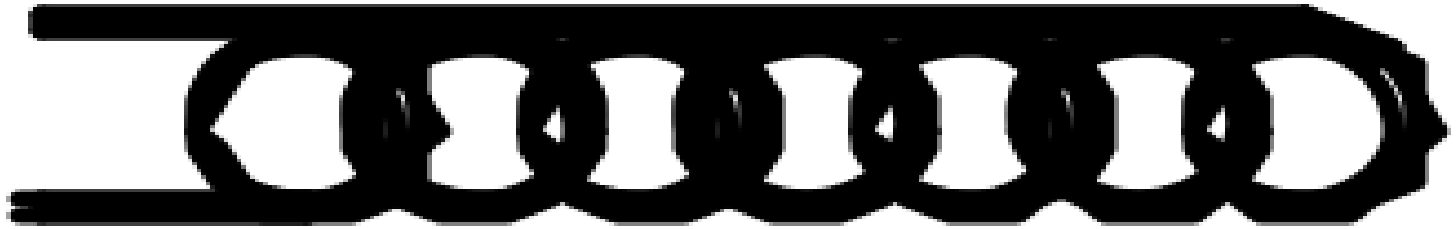

6' Diameter Coil – 20 Pitch Slinky

Sand Bath Field Loop Design

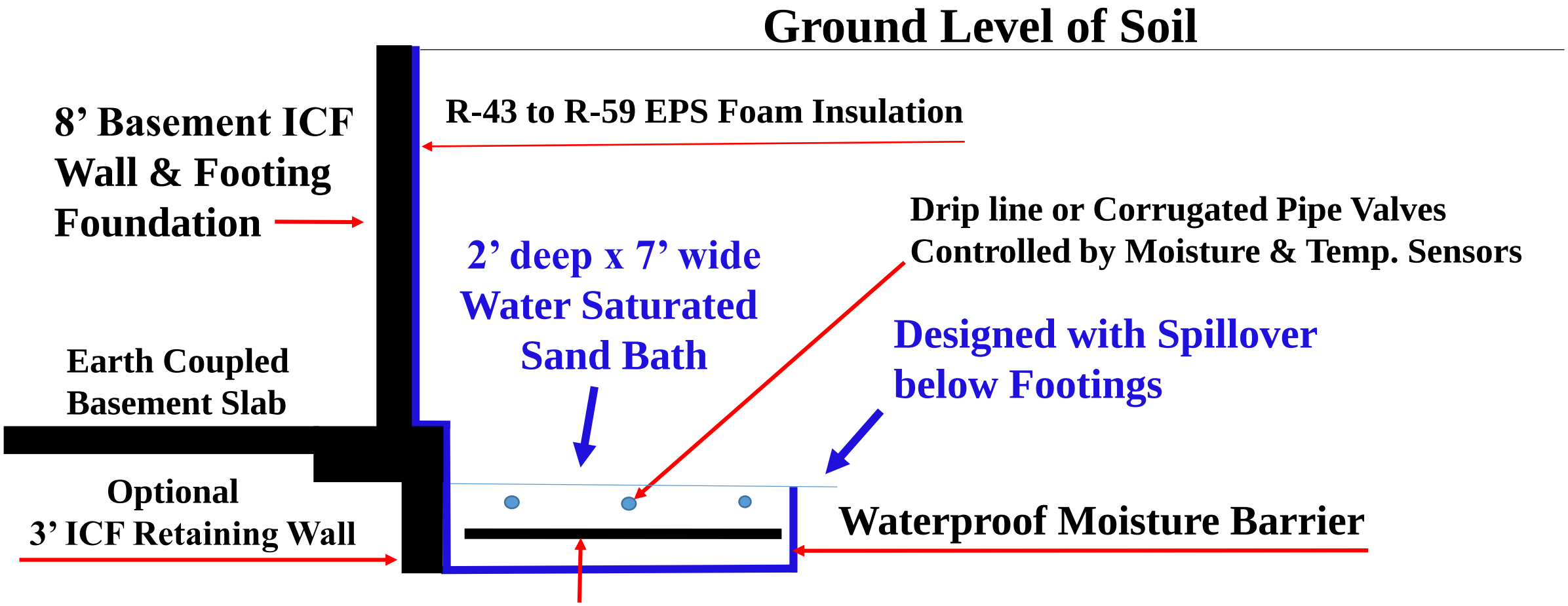

1.25" Tubing - Slinky Coil Field Loops – Providing Geoexchange for GSHP

Porosity Ranges for Sediments

Material	Porosity (%)
well-sorted sand or gravel	25-50
sand and gravel, mixed	20-35
glacial till	10-20
silt	35-50
clay	33-60
(Based on Meinzer (1923a); Davis (1969); Cohen (1965); and MacCary and Lambert (1962) as quoted by C.W. Fetter [2])	

Sands have large pore spaces, whereas clays have many small pore spaces. Both sand and clay can have high porosity.

Thermal Conductivity and Diffusivity of Sand and Clay Soils

Thermal Conductivity (**k**) - **Btu/hr-°F-ft** and Thermal Diffusivity (α) - **ft^2/day**

Soil Type	Dry Density	5% Moist		10% Moist		15% Moist		20% Moist	
		k	**α**	**k**	**α**	**k**	**α**	**k**	**α**
Coarse 100% Sand	120 lb/ft^3	1.2-1.9	0.96-1.5	1.4-2.0	0.93-1.3	1.6-2.2	0.91-1.2	-	-
	100 lb/ft^3	0.8-1.4	0.77-1.3	1.2-1.5	0.96-1.2	1.3-1.6	0.89-1.1	1.4-1.7	0.84-1.0
	80 lb/ft^3	0.5-1.1	0.60-1.3	0.6-1.1	0.60-1.1	0.6-1.2	0.51-1.0	0.7-1.2	0.52-0.90
Fine Grain 100% Clay	120 lb/ft^3	0.6-0.8	0.48-0.64	0.6-0.8	0.4-0.53	0.8-1.1	0.46-0.63	-	-
	100 lb/ft^3	0.5-0.6	0.48-0.58	0.5-0.6	0.4-0.48	0.6-0.7	0.37-0.48	0.6-0.8	0.41-0.55
	80 lb/ft^3	0.3-0.5	0.36-0.6	0.35-0.5	0.35-0.5	0.4-0.55	0.34-0.47	0.4-0.6	0.30-0.45

Coarse grain = 0.075 to 5 mm - Fine Grain less than 0.075 mm

Geothermal Field Loop Lengths

- The table below provides recommendations for ground loops in the Tennessee Valley Authority service area and beyond. The values use results from this TVA sponsored project coupled with a previous Alabama Power project and the resulting recommendations for Alabama (Kavanaugh, 1991).
- The length of the trench or bore must be based on the amount of pipe in the trench, burial depth, and average ground temperature and conductivity. The table provides extremes of pipe length per length of trench from 10 ft/ft (i.e. 1000 ft. of pipe in a 100 ft. long trench) to 2 ft/ft.

Geothermal Field Loop Lengths cont.

- The table was developed for an average burial depth of 5 ft. and ¾” high-density polyethylene (HDPE) pipe. The extremes of normal ground temperature are 44°F for the northern continental US and 70°F in southern USA (not including southern Florida and Texas and all of Hawaii).
- These lengths should provide a maximum loop temperature of 90°F entering the heat pump in normal applications. In homes with excessive run times this temperature will be 3° to 5°F higher.
- The table also includes recommendations for vertical ground loops in ft. of bore per ton for ¾” and 1-1/4” HDPE, which will operate about 5°F cooler than the horizontal loops.

Table 1. Recommended Lengths of Trench or Bore Per Ton For GCHPs

Multiply length of trench by pitch to find required length of pipe.
See Tables 4 and 5 for Thermal Conductivity of Soils and Rocks.

	Pitch	Ground Temperature - °F						
Coil Type (See Figure 1 for Details)	**Ft. of Pipe per Ft. Trench (or Bore)**	**44 to 47° F**	**48 to 51° F**	**52 to 55° F**	**56 to 59° F**	**60 to 63°F**	**64 to 67°F**	**68 to 70°F**
Horz. 10-Pitch Slinky	10	125	120	115	120	125	150	180
Horz. 6-Pipe/6-Pitch Slinky	6	180	160	150	160	180	200	230
Horz. 4-Pipe/4-Pitch Slinky	4	190	180	170	180	190	220	260
Horz. 2-Pipe	2	300	280	250	280	300	340	400
Vertical U-tube (3/4" Pipe)	2	180	170	155	170	180	200	230
Vertical U-tube (1" Pipe)	2	170	160	150	160	170	190	215
Vertical U-tube (1¼" Pipe)	2	160	150	145	150	160	175	200

Table 1 based on k=0.6 Btu/hr-ft-°F for horizontal loops and k=1.2 Btu/hr-ft-°F for vertical loops and an annular fill/grout conductivity of 0.85 in vertical loops. For other conditions:

L/Ton(Corrected) = L/Ton (Table 1) × CF(k-ground) × CF(k-annulus)

Ground Therm. Cond. (Btu/hr-ft-°F)	0.4	0.6	0.8	1.0	1.2	1.4	1.6	1.8	2.0
Horz. Loop, **CF(k-ground)**	**1.22**	**1.0**	**0.89**	**0.82**	**---**	**---**	**---**	**---**	**---**
Vert. Loop, **CF(k-ground)**	**---**	**---**	**1.23**	**1.10**	**1.0**	**0.93**	**0.87**	**0.83**	**0.79**
Annulus Ther. Cond. (Btu/hr-ft-°F)	0.4	0.6	0.8	0.85	1.0	1.2	1.4	No Correction for Horz. Loop	
Vert. Loop, **CF(k-annulus)**	**1.2**	**1.08**	**1.01**	**1.0**	**.98**	**.93**	**0.91**		

Sand Bath Design Considerations

- There are three critical design factors for the sand bath: Heat capacity, thermal conductivity and thermal resistivity.
- Thermal conductivity should range from 1.4 to 1.7 according to literature.
- Heat capacity will be determined by porosity ratios. Total capacity will be about 75% less than a pure water bath as sand holds less heat than water. However, the increased conductivity offered by the combination of sand and water will make this a worthwhile tradeoff.
- Thermal resistance in the case of the hydrated sand bath will be due primarily to pipe resistance. Using 1.25” HDPE tubing and running two parallel slinky loops from a manifold will reduce this resistivity by a factor of four.

Geothermal Emitter - Field Loop or Slinky Loop Flow Rates & Tube Sizes

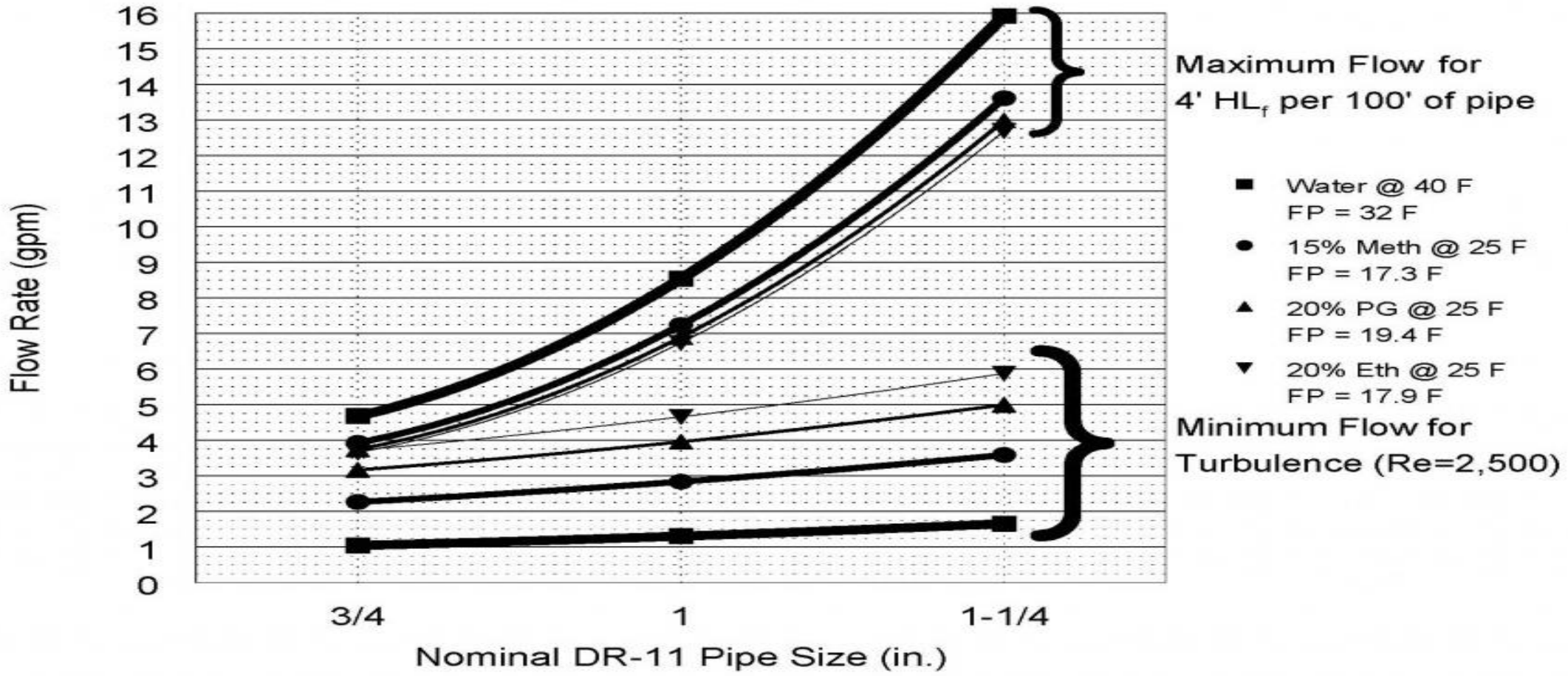

Water vs. Anti-freeze Solutions

- The above chart reveals that thermal heat exchange is highest with pure water vs. using anti-freeze solutions.
- This allows for substantially reducing flow rate which decreases head loss and circulation pump power required.
- Strategically over-sizing slinky loops in hydrated sand baths for 1.25 inch tubes has potential for optimizing heat exchange while minimizing head loss.
- This would result in minimizing temperature differential for the geothermal loop, thus optimizing COP and EER for the GSHP system.
- This is particularly true for integrated solar thermal – GSHP system.

Geothermal Trench Lengths per Ton of Capacity for 1.25 inch Emitter Tubing in Footing Trench

		Ground Temperature °F						
Loop Type & Size – 1.25” tubing	**Pitch**	**44-47**	**48-51**	**52-55**	**56-59**	**60-63**	**64-67**	**68-70**
		Length of Slinky Coils (ft.)						
6’ Diameter Slinky Coils – 7’ Wide Trench - Horizontal Loop Field - 20 Pitch	20	16	15	14.5	15	16	17.5	20
6’ Diameter Slinky Coils – 7’ Wide Trench - Horizontal Loop Field - 40 Pitch	40	8	7.5	7.25	7.5	8	8.75	10
Straight Line – 1 Loop around Structure - 4’ trench	1	320	300	290	300	320	350	400

PHMH-2512

GSHP Geoexchange Slinky Loop Field Installed Around Basement Footings Using a Moisture Barrier and Sand Bath

7' Wide Trench by 8-10' Deep for 20' per ton Slinky Coil Loops

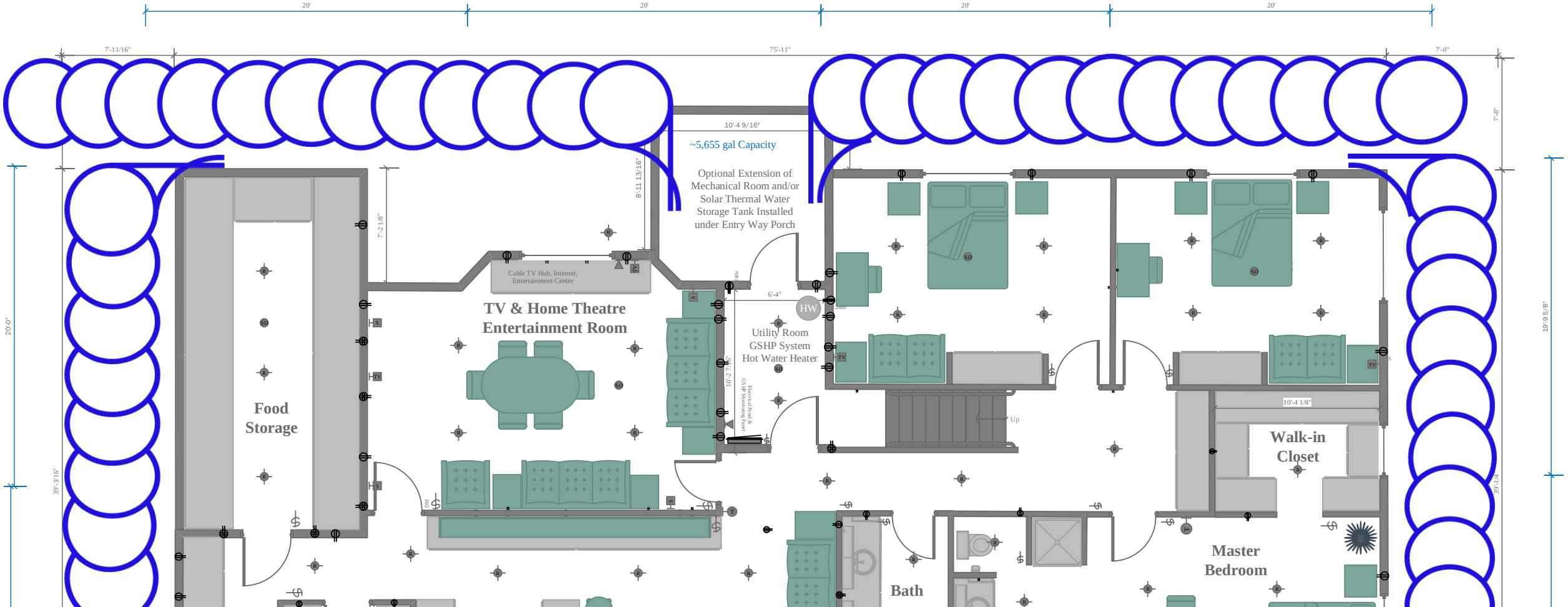

Geothermal Loop Head Loss

- GeoPro's Excel spreadsheet macro calculates head loss of 7.12 ft. (0.89/100 ft.) for 2 ton loops using 1.25" emitter tubes and 800' loop lengths at a flow rate of 6.5 GPM for water (no antifreeze required for a solar thermal drainback system and strategic geothermal design). Increasing flow rate to 8.0 increases the head loss to 10.16 ft. for the supply loop.
- Two of these loops connected to a manifold will be utilized for meeting 2nd stage peak heating capacity via the GSHP and also for supplying 3rd stage pre-heating and pre-cooling fan coils, and for hydronic supply to the air handler heating and cooling coils.
- A solar thermal-GSHP system head loss of ~9 ft. and a flow rate of 6.5-8 GPM will require a circulator pump ranging from 0.1 to 0.167 hp for the supply loop of the integrated solar thermal - GSHP- ERV and air handler system.

PHMH-2512 Configuration – 16,000 Btu/hr. Peak Heating - ~12,000 Btu/hr. Peak Cooling

- With solar thermal providing 70-90% of peak heating capacity, the 2nd stage GSHP system will be used minimally.
- A one ton GSHP will be integrated with the RecoupAerator 200DX ERV, providing 96% heat exchange efficiency.
- Solar thermal and geothermal loops will enhance efficiency of forced air heating, cooling, and regulation of humidity via pre-heating and pre-cooling coils.
- Relatively small slinky loop lengths, 20 pitch provided via 6’ diameter loops, all water system in hydrated sand baths with 1.25 inch emitters will minimize head loss, flow rate, and power consumption for circulation pumps while optimizing heat exchange efficiency.

Hydronic-Radiant Distribution Loop

- The design of the hydronic-radiant distribution loop and delivery system will be simplified and balanced with the supply of the geothermal loops.
- Due to relatively low cost ($0.51/ft.) of 1.25 inch emitter tubing, two to four loops will be utilized for an over-sized sand bath, providing 1-2 ton capacity per loop.
- Similarly, the radiant distribution system will be comprised of 7/8” pex tubing placed on 8 inch centers and embedded in a 4” concrete slab.
- This integrated solar thermal – GSHP – ERV – hydronic-radiant floor and 2nd stage ERV/air handler system will allow for minimizing temperature differentials for EWT and LWT, thus increasing COP and EER by up to two-fold.

Twister™ Geoexchange Loop Technology

- Originally designed to increase thermal exchange for use with boreholes, Twister™ loop technology can provide similar benefits for use with horizontal ground loop applications, but without decreasing installation costs in comparison with drilling vertical bore holes.
- TWISTER™ heat exchangers use 3/4” ASTM D3035/D3350 Cell Classification 445574C SDR 11 or 13.5 HDPE (IGSHPA Requirement) tube/pipe spirally wound around a central 2” center pipe used to guide the Tremie tubes/pipes.
- Supplied on coils or reels, with factory prepared u-fittings, installation is quick and easy.

Twister™ (twisted pipe) Loop Configurations

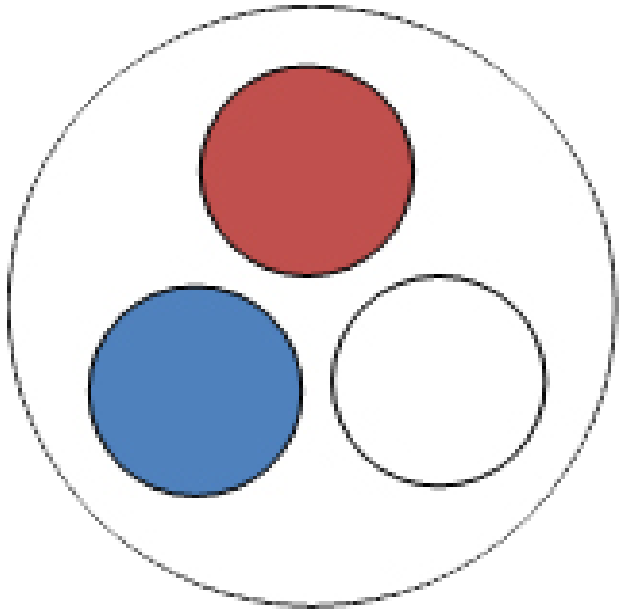

Borehole Design with one loop and a Tremie pipe

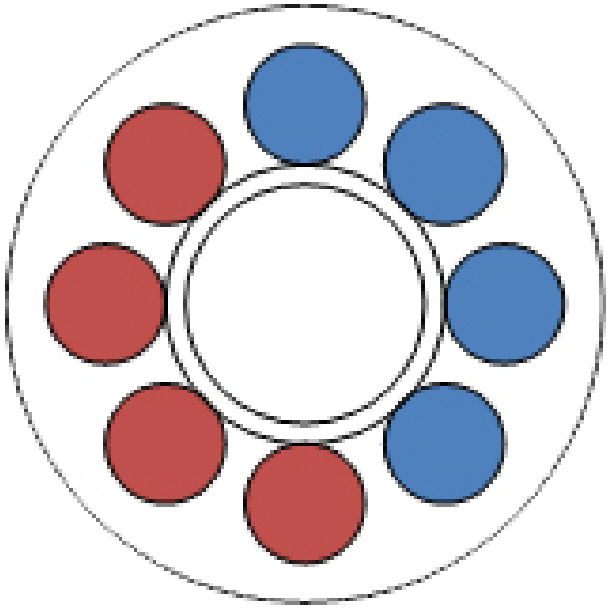

Borehole Design with TWISTER Pipe (4 ubend loops and a central conduit)

Horizontal borehole design for hydrated sand baths would result in eight unidirectional geoexchange tubes, thus reducing pump headloss substantially.

Calculating TWISTER Headloss

- A sand bath application will usually result in eight 0.75” HDPE tubes flowing in one direction. In this case a minimum of 6.5 GPM would be required with 8 GPM recommended.
- Vertical bore holes using TWISTER with ubends is for 4 tubes out and 4 tubes back. Using the unidirectional application would reduce the head-loss in half again. Since the flows are parallel, merely split total flow into 4 (8 for unidirectional) and then figure out the head loss in 1 tube. The flow rate will be the same as for the 4 tube configuration.
- The tubes are all 0.75” SDR 13.5 HDPE pipe (standard geo pipe OD 1.050” ID .894”), thus standard methods can be used to calculate head loss.
- The center pipe is a corrugated 2” HDPE pipe. The ID is 1.9” and the OD is 2.4”.

Twister™ Loop Configuration & Performance

- Gaia Geothermal Ground Loop Design software has demonstrated that up to 50% reduction in loop length is possible using Twister™ technology vs. conventional geoexchange tubing for vertical bore holes. Similar reductions in loop length and headloss is possible for horizontal applications in hydrated sand baths.
- Results will vary by installation which should follow IGSHPA guidelines.

Outside Diameter	Center Pipe	Loop Pipe	#Loops	ASTM	Cell Classification
4.475”	2” HDPE	0.75” HDPE (SDR 11/13.5)	8	D3035/D3350	445574C

Comparing Head Loss for TWISTER vs. 1.25” Slinky Coils

- Headloss for 1 ¼” HDPE tubing is 0.708 ft/100 ft. @ 6.5 GPM for slinky coil geoexchange loops (800 ft. loops = 40’ of 6’ diameter slinky coils which provides ~2.5 tons of GSHP capacity).
- Headloss for eight 0.75” unidirectional tubes in parallel using TWISTER technology at an accumulated 8 GPM is only 0.209 ft./100 ft.
- Additionally, one can slow down the flow rate through the TWISTER to less than 4 GPM and still maintain good heat transfer.
- System design requires reviewing the impact of flow rate on the COP of the GSHP.

Cost Comparisons of Geoexchange Tubes

- Using TWISTER™ technology can reduce thermal resistance by a factor of 4 or 8 depending on design. This means that ~200’ of TWISTER™ in the sand bath should perform similar or better than 800-1600’ of ¾ inch slinky loops.
- Provided that the material and shipping costs are similar to the slinky coils, the primary advantages of the TWISTER™ technology is the labor to install (TWISTER - $4/sqft va. 1.25” HDPE - $0.51/ft).
- The TWISTER™ configuration would be less time consuming to lay out than forming and connecting the slinky coil loops.

Integrated Solar Thermal-GSHP-Desuperheater with Propane Furnace

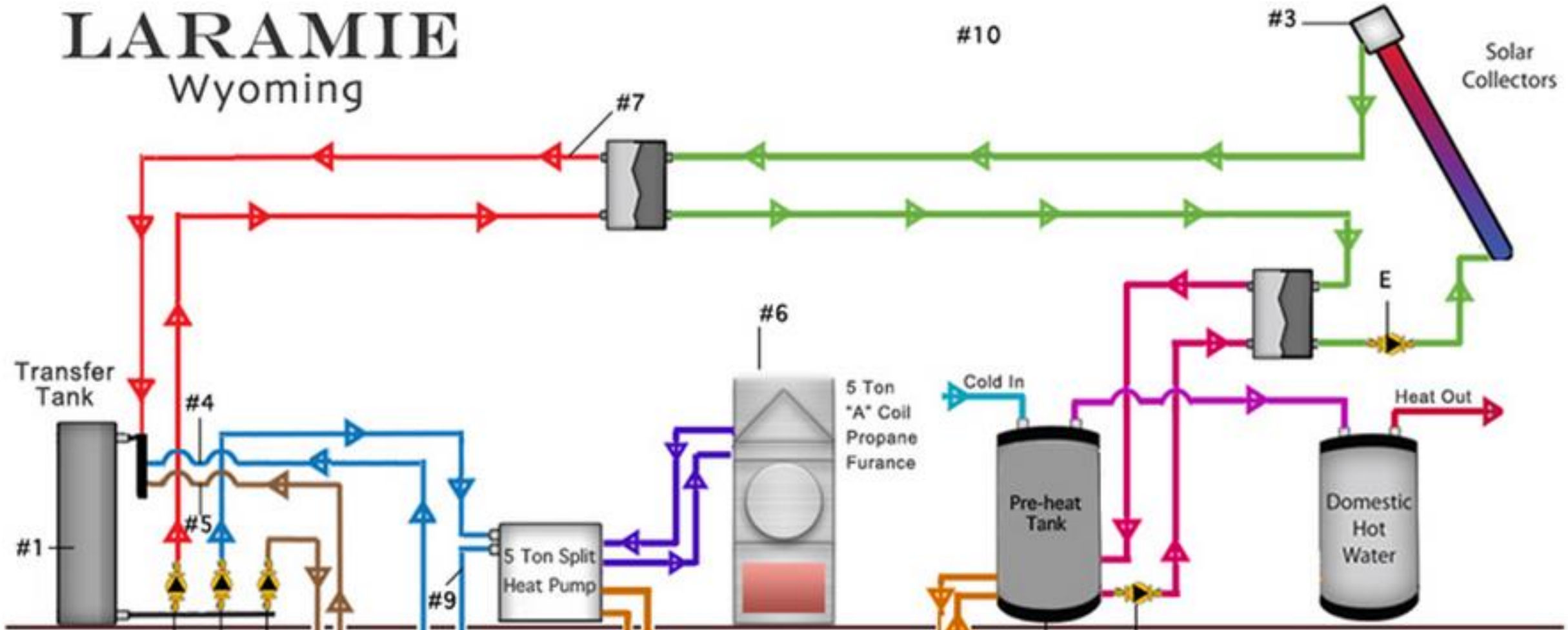

Integrated Solar Thermal-GSHP-Desuperheater with ICF Hydronic System

- A hydrated sand bath and the concrete in an ICF structure integrated with radiant heating and cooling would function as a similar thermal battery system, replacing the 300’ geothermal loop with the sand bath, replacing the 5 ton propane furnace with 2nd stage fan-coils, and reducing or perhaps eliminating the need for a 2,500 gal. water tank and loop/coil.
- This approach could be substantially less expensive than using vertical bore holes for geoexchange loop fields.
- A concrete water tank used as a thermal battery could be used in place of conventional tanks to substantially reduce costs.

Integrated Solar Thermal-GSHP-Desuperheater with Drainback Tank

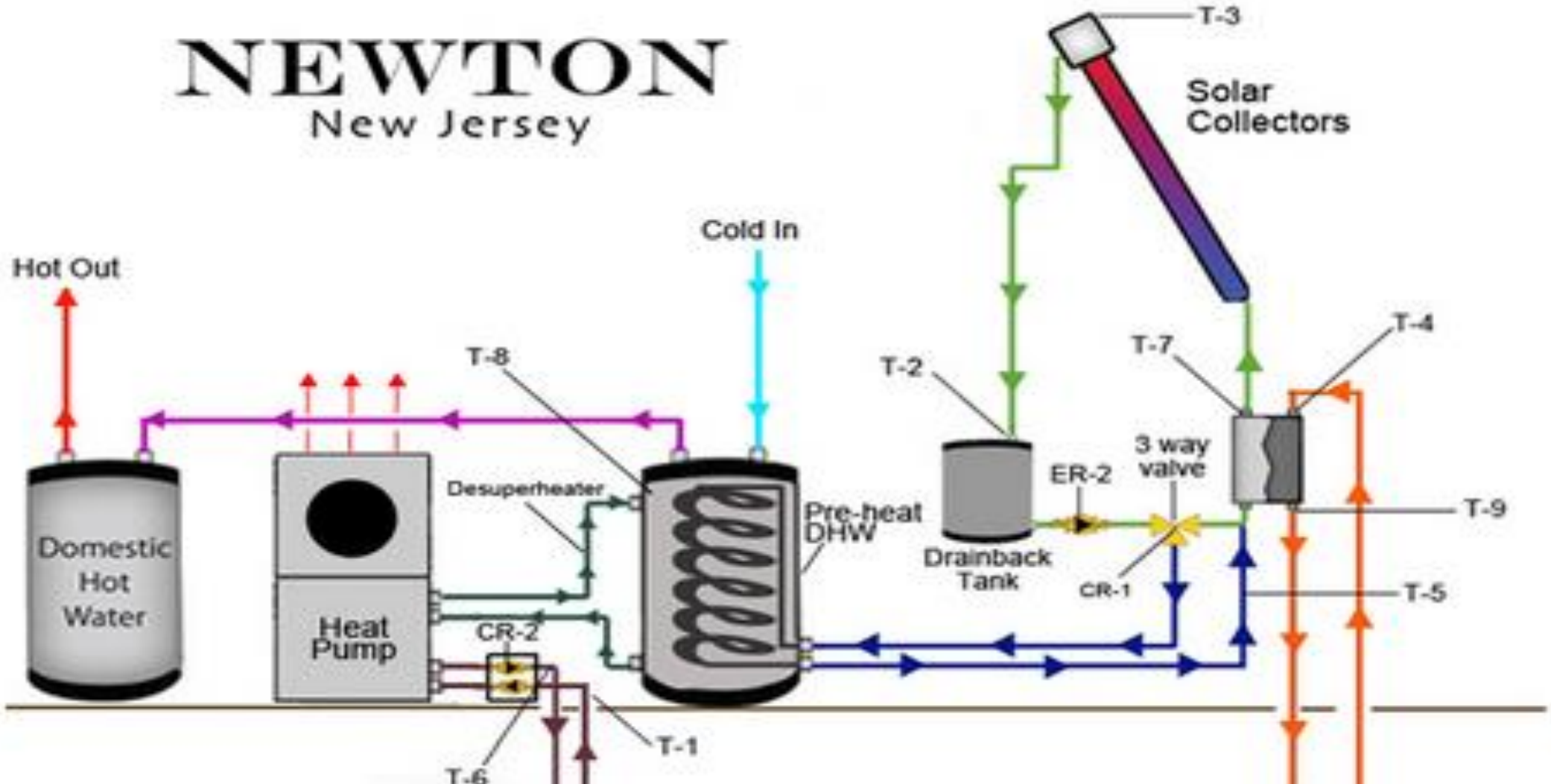

Integrated Solar Thermal-GSHP-Desuperheater with Thermal Battery Pods

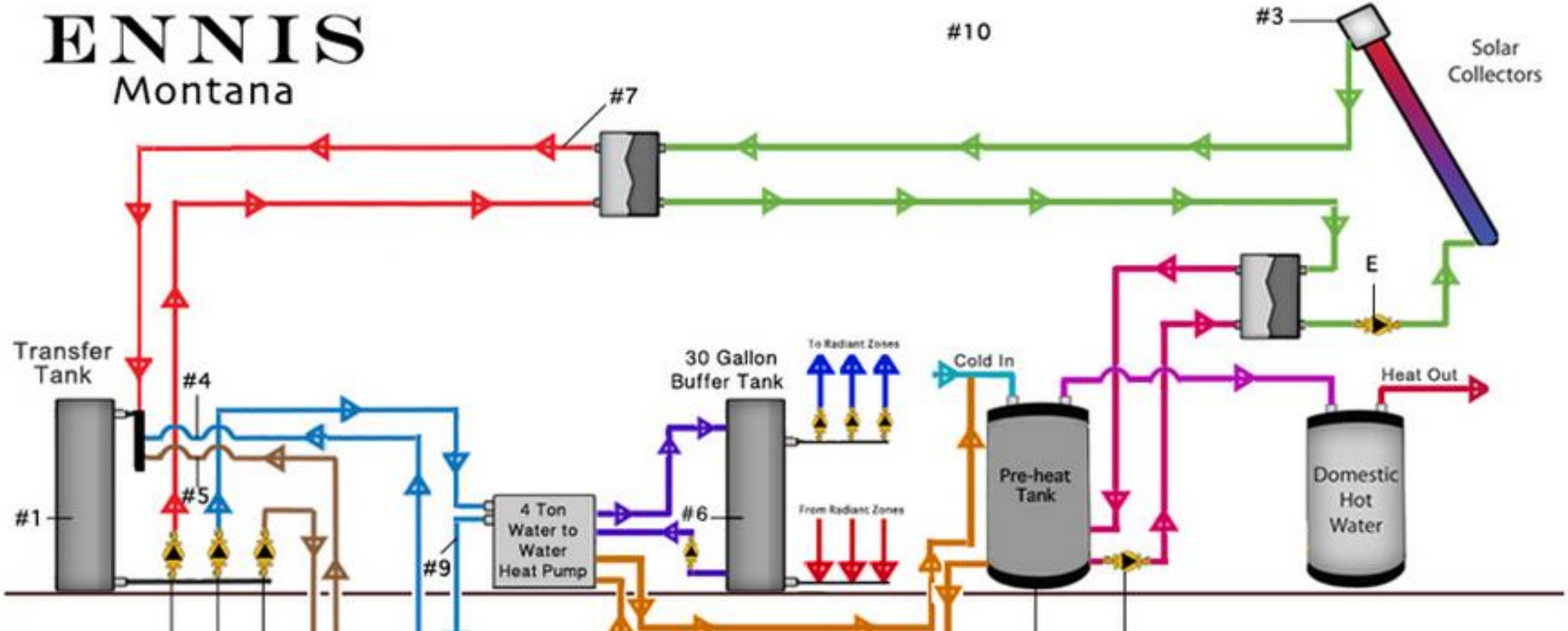

Soil Moisture Probe & Monitoring

- Technology, such as the WaterMark sensor, exists wherein soil moisture levels in the sand bed surrounding a structure can be monitored and maintained to insure maximum heat exchange for GSHP field loops.
- In use since 1978, the patented WATERMARK sensor is a solid-state electrical resistance sensing device that is used to measure soil water tension. As the tension changes with water content the resistance changes as well. That resistance can be measured using the WATERMARK Sensor.

Soil Moisture Probe & Monitoring

- The sensor consists of a pair of highly corrosion resistant electrodes that are imbedded within a granular matrix. A current is applied to the WATERMARK to obtain a resistance value. The WATERMARK Meter or Monitor correlates the resistance to centibars (cb) or kilopascals (kPa) of soil water tension.
- The WATERMARK is designed to be a permanent sensor, placed in the soil to be monitored and “read” as often as necessary with a portable or stationary device. Internally installed gypsum provides some buffering for the effect of salinity levels normally found in irrigated agricultural crops and landscapes.

WaterMark Principles of Operation

- The WATERMARK sensor is a resistive device that responds to changes in soil moisture.
- Once planted in the soil, it exchanges water with the surrounding soil thus staying in equilibrium with it.
- Soil water is an electrical conductor thereby providing a relative indication of the soil moisture status.
- As the soil dries, water is removed from the sensor and the resistance measurement increases.
- Conversely, when the soil is rewetted, the resistance lowers.

Resistive Measurements via Internal Matrix

- The WATERMARK sensor is unique in that it takes its resistive measurement within a defined and consistent internal matrix material, rather than using the surrounding soil as the measurement medium.
- This unique feature allows the sensor to have a stable and consistent calibration that does not need to be established for every installation. The relationship of ohm of resistance to centibars (cb) or kilopascals (kPa) of soil water tension is constant and built into the reading devices that are used to interrogate the sensor.
- The sensor is calibrated to report soil water tension, or matric potential, which is the best reference of how readily available soil water is to a plant.

WaterMark Sensor Construction

- The WATERMARK sensor consists of stainless steel electrodes imbedded in a defined and consistent internal granular matrix material that acts like a soil in the way it moves water.
- This matrix is encased in a hydrophilic material that establishes good hydraulic conductivity with the surrounding soil and is held in place by a durable stainless steel perforated shell with plastic end caps.

WaterMark Sensor Information

- MATERIALS: ABS plastic caps with stainless steel body over a hydrophilic fabric covered granular matrix.
- DIMENSIONS –
  - DIAMETER: .875 in. (22 mm)
  - LENGTH: 3.25 in. (83 mm)
  - WEIGHT: .147 lb. (.067 kg) – with 5 ft. lead
- WIRE LEADS: AWG 20, 2 leads
- WARRANTY: One year
- ORDERING INFORMATION: Catalog #200SS
- Standard length leads: –5 = 5 ft. (1.5 m), –15 = 15 ft. (4.5 m) –OR– –_ _ _ = custom length.
- Catalog #200SS-X = without leads.

Watermark Specification Information

- The soil moisture measurement device, or sensor, shall represent soil moisture status in units of soil water tension or matric potential, registering in centibars (cb) or kilopascals (kPa) when read with a compatible reading device.
- Its construction shall be of the Granular Matrix Sensor (GMS) type and require no on-site calibration or routine maintenance.
- It shall be durable, long-lasting, not subject to dissolving in a wet soil environment with an outer surface of stainless steel and ABS plastic. It shall be the WATERMARK sensor as manufactured by the IRROMETER Company, Inc. of Riverside, California.

Temperature Sensor

- An accurate temperature probe for the MicroLAN bus. Up to 20 sensors can be added to a single controller.
- Uses a DS18B20 digital sensor with a sensor range of -55°C to +125°C (-67°F to +257°F). The sensor is pre-calibrated to better than +/-0.5°C accuracy and provides a resolution of 0.125°C. Probe is potted and encapsulated in a stainless steel housing, 30mm long, 6mm diameter.

eZEio Controller - GSM

eZEio Controller - GSM

- The ezeio Controller comes ready to use to start monitoring, logging and controlling over the Internet.
- As soon as the controller is connected to power and an Internet or GSM connection, it will start communicating with the eze System servers. There is no need for special software or network setup. The ezeio connection is encrypted, bidirectional and very efficient.
- The ezeio comes complete with antenna, a power supply, an ethernet cable and 4 months of basic service.
- The ezeio-G controller works exactly like the basic version, but adds a built-in GSM radio that automatically activates if an Ethernet connection can't be established.
- Works with AT&T or T-Mobile service in the US. Note that SIM card is *not* included, and a separate GSM service is required to use the wireless feature.
- In a small setup with a few inputs logging data, the ezeio typically use less than 5MB data per month. The data use obviously goes up if many inputs log data very often or API features are used.
- The ezeio-GSM is a perfect solution where Ethernet access is not available, on moving platforms or as a backup to the wired connection.

eZEio Features

- Built-in GSM cell phone transciever
- Automatic fail-over to GSM if hardwired Ethernet is not available
- 4 analog general purpose inputs (0-10V / 4-20mA / S0-pulse / digital)
- 2 general purpose relay outputs (max 50V@2A)
- ModBus compatible serial port
- MicroLAN (1-wire) master
- Standard Ethernet 10/100 port
- Runs on 8-25VDC, <1W typical draw
- Logging interval configurable from 10 seconds up to 4 hours for each input
- Up to four alarm thresholds for every input
- Alarms can send email, control outputs, set modes and more
- Live access from standard web interface
- No special firewall or network configuration
- HTTP XML API available for easy integration with other systems
- Includes antenna, 12VDC power adapter and a 6ft Ethernet cable

Thermostat T-32-P

- The T-32-P is a single zone thermostat, capable of running one, two or three stage systems. It communicates with the eZEio controller through MODBUS.
- The T-32-P universal thermostat is a perfect mix of esthetics, intuitive operation and performance at an amazingly affordable price. The T-32-P is compatible with most residential and commercial HVAC systems and is ideally suited for use with the eZEio controller.
- Up to 20 thermostats can be connected to a single eZEio controller.

PHMH-2505 Heating & Cooling Requirements

- According to NREL’s BEopt modeling and EnergyPlus simulation software, the increase in annual peak heating and cooling loads is disproportionate with increasing living space for passive house construction.
- The following heating and cooling loads are based on preliminary modeling and simulation using rudimentary custom options for an integrated solar thermal-GSHP-desuperheater system for provision of radiant heating, cooling, and domestic hot water.

Web-based Monitoring for Integrated Solar Thermal-GSHP-Desuperheater Systems

- Provide the ability to log and analyze real time data using a series of strategic temperature sensors, watt meters, and flow meters, allows for:
  - Optimizing subsystem and whole system efficiencies
  - Providing state-of-the-art diagnostics
  - Providing preventive maintenance
- Monitoring of the system is accomplished via installation of simple yet sophisticated sensors and controls
- These systems will pay for themselves within the first few years of operation
- Data banks can be utilized for modeling, simulation, and precision design of integrated systems

Integrated HVAC System Flow Chart

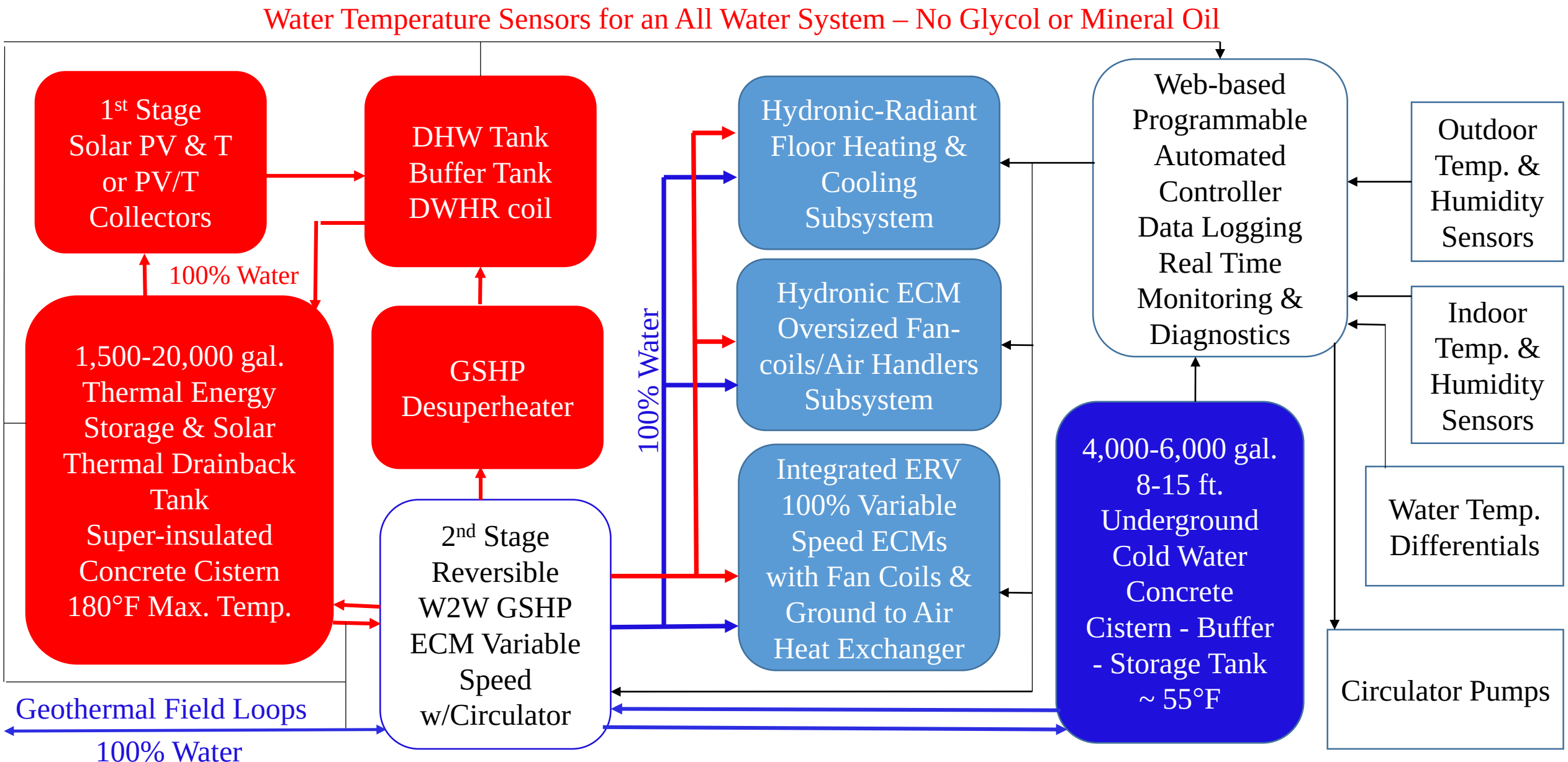

PHMH-2505 sqft on Main Floor

- Addition of a full basement increases heating and cooling capacity less than 1% for passive houses/ZNE homes
- Addition of a finished attic [with a 3’ wall and cathedral ICF ceiling over the entire structure including the garage (total of 3920 ft.^{2} for finished attic space)] increases energy consumption by 38% (peak heating from 11 to 16.44 kBtu/hr., peak cooling from 0.91 to 1.37 tons, and annual heating from 463 kWh/yr. to 466 kWh/yr.)
- Merely for the purpose of illustrating energy efficiency, the total area of all three floors is 8,930 ft.^{2} not including the food storage or mechanical room storage areas on the basement floor.

Strategic Passive House Design

- In order to benefit from the efficiency of converting crawl spaces and attic spaces into energy efficient living space, the main floor should be designed with this in mind.
- For example, regarding the PHMH-2505 floor plan listed above, the main floor could be downsized by 50% with the bedrooms being placed above the garage.
- The size of the basement would also be reduced by 50% not including the unconditioned food storage area.

GeoExchange System EWT – Summer

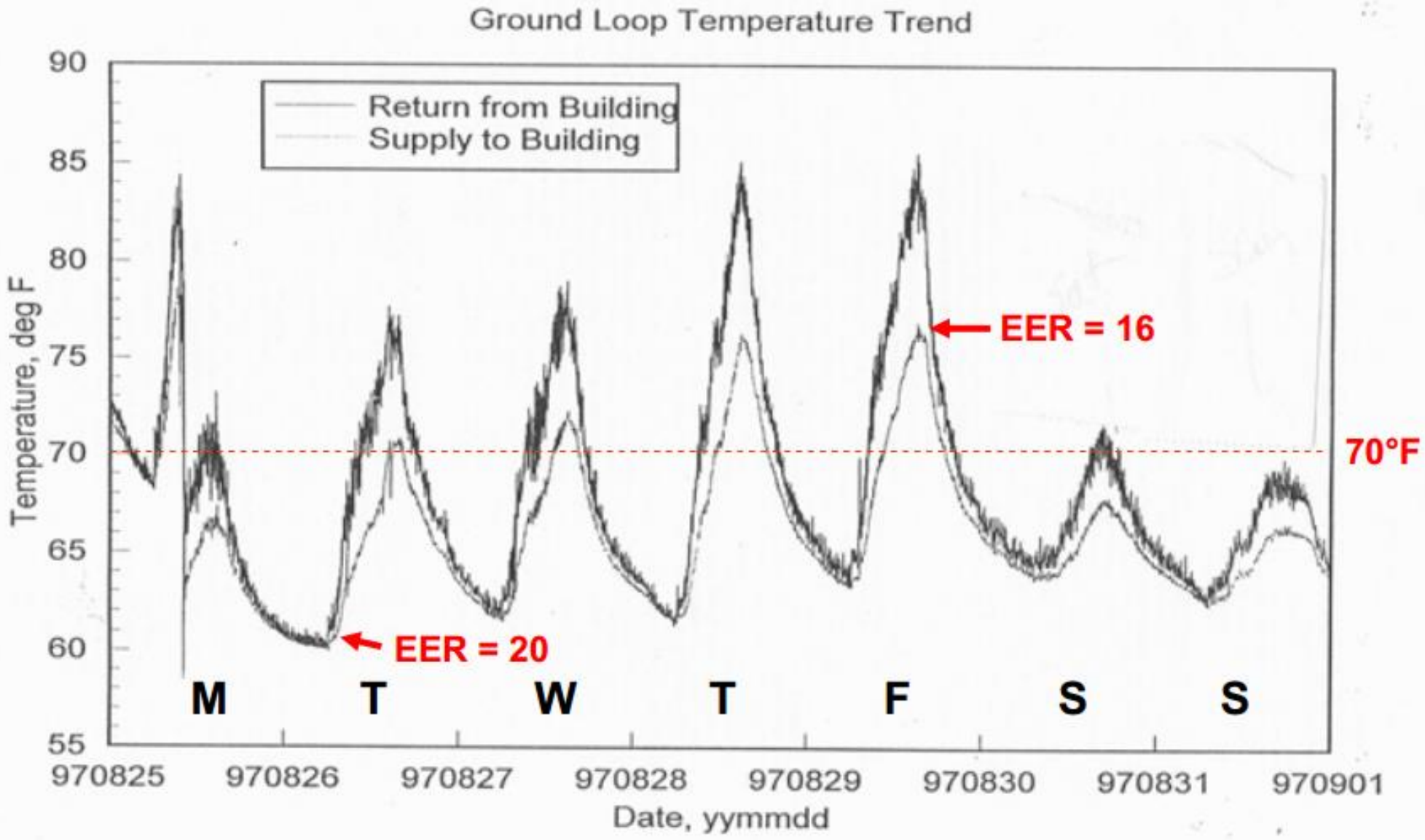

GeoExchange System EWT – Winter

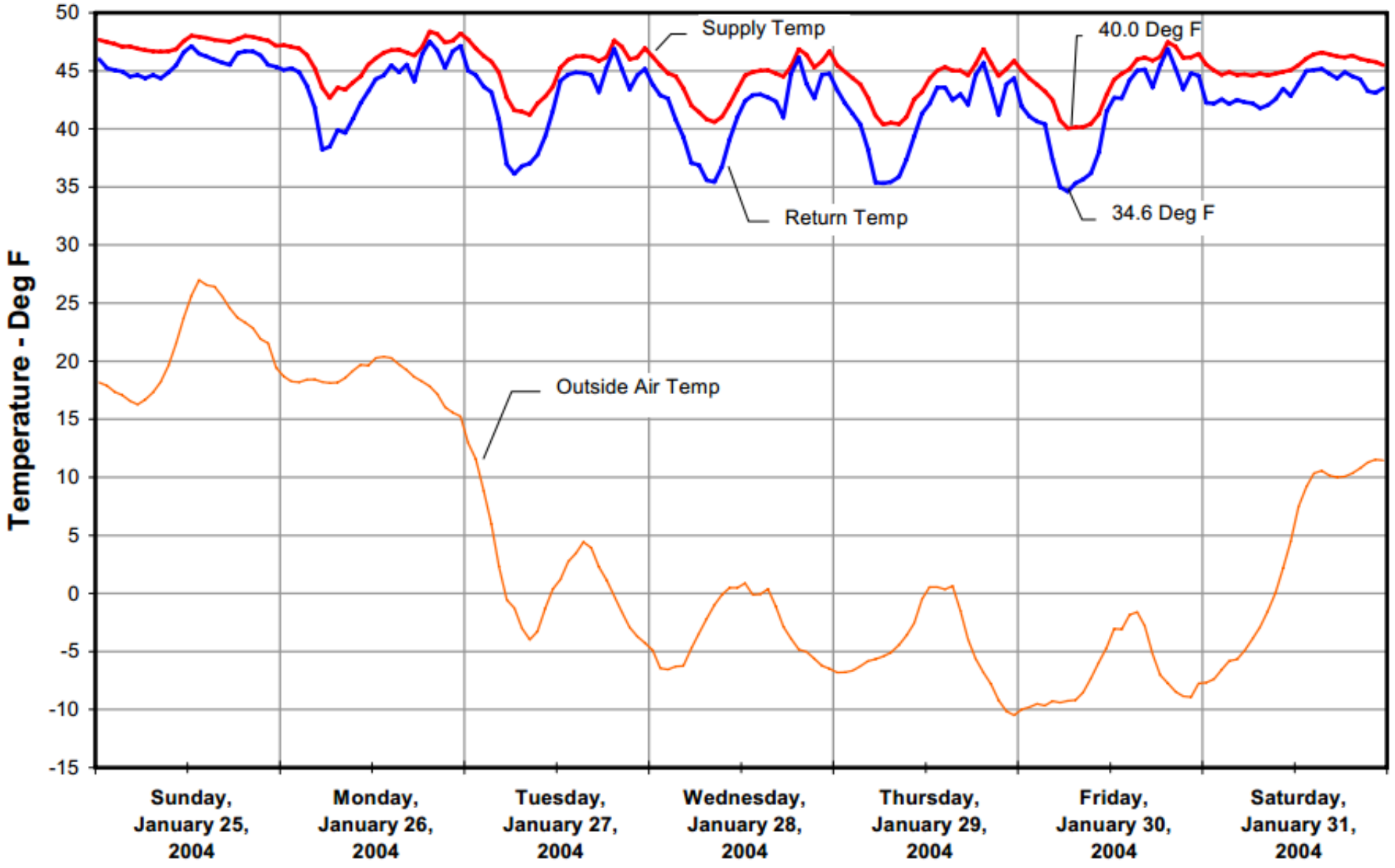

GeoExchange System EWT -- Annual

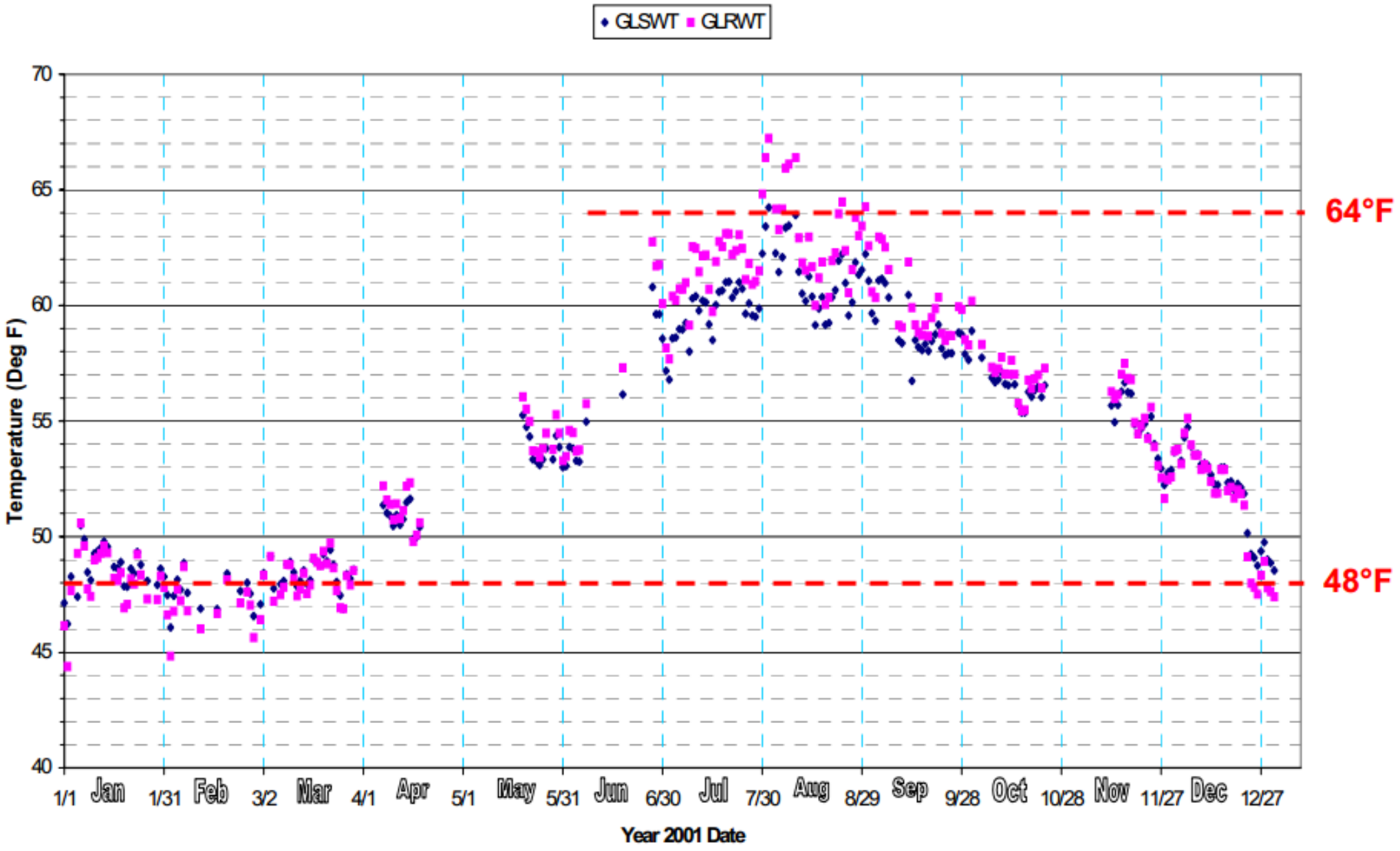

GSHP ΔT (Temperature Differential)

- As illustrated above, for Iowa soils and GSHP systems, soil temperature at about 8 ft. deep ranges from ~48°F in the winter to ~63°F in the summer.
- Thus, there is substantial opportunity to use solar thermal energy to reduce the temperature differential (delta T) of the EWT and LWT for the GSHP in the winter.
- For radiant floor heating with a buffer tank maintained at 90°F, there is a maximum 42°F temperature differential between the EWT and LWT.
- Integration of solar thermal collectors and desuperheaters could reduce or virtually eliminate this temperature differential, thereby increasing the COP of the GSHP by as much as two fold, possibly more depending on the efficiency of the solar thermal system.

Solar Thermal Production in Temperate Climates

- In the sunny middle of the US, one sqft of Solar Flat Panels can produce an average of 294,000 Btu’s per year at an initial panel cost of $32 per sqft.
- On a bright Fall or Spring day they will produce 1,418 Btu’s per sqft per day.
- For a peak heating load of 9000-11,000 kBtu/day in a climate that typically provides 1,418 Btu/sqft/day, 70-100 sqft of passive solar thermal panels would be required. Allowing for cloudy days and shorter winter days, doubling sqft to 140-200 sqft should be sufficient for optimizing production of solar thermal energy.
- For an active system, e.g., solar thermal tracker, this could reduce the sqft of solar thermal panels by as much as 33%, e.g., to 50-70 sqft.

GSHP System Energy Considerations

- Circulating Pump Energy
  - Pumping Energy Can Be Significant due to 24 / 7 Load Factor
  - Minimizing Pump Head effective
  - Many Geothermal Systems have excess Pumping Energy
- Circulating Pump Monitored Energy Use:
  - Represents 8 % of the HVAC Metered Peak Demand
  - Consumes 36 % of the Total Building HVAC Energy
  - Responsible for 18 % of the Total Building Energy Costs
- Evaluate Pumping Options
  - Decentralized Loop Distribution
  - Two stage parallel pumping
  - Variable Flow pumping w/VFD’s

Energy Considerations

■ ASHRAE Technical Paper

- ***"Energy Use of Pumping Options for Ground Source Heat Pumps"***

  An ASHRAE Technical Paper by Stephen Kavanaugh, PhD. and Sally McInerny, Ph.D.,P.E.

Evaluated Energy Consumption of 4 Pumping Systems

- Constant Speed
- Primary / Secondary
- Variable Speed Drive
- Decentralized Pumping

Majority of Savings due to the ability to cycle off pumps during unoccupied hours and lower pump head requirements

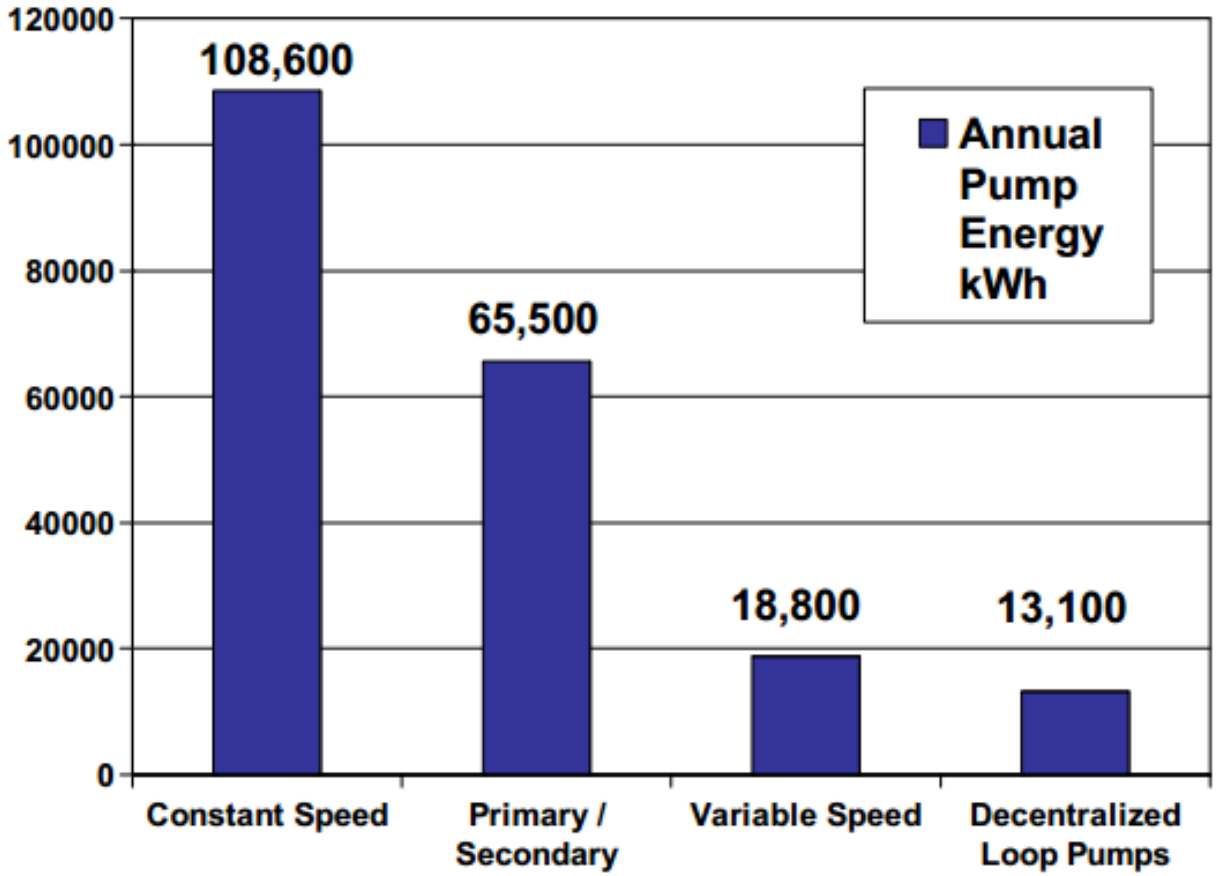

Energy Considerations

■ Pump Energy Report Card

By Stephen Kavanaugh, PhD

kWh

Pump Power per 100 tons	Grade
5 or Less	A – Excellent
5 to 7.5	B – Good
7.5 to 10	C – Mediocre
10 to 15	D – Poor
15 or More	F – Bad

GV Series Circulation Pumps

- When properly installed, the GV-series flow-centers self-regulate, using the minimum power necessary for supplying the optimal flow rate to each running heat pump (regardless of size or proximity to flow center).
- **Features:**
  - Electronically Commutated Motor (ECM) Variable Speed Pump Technology
  - Lowest Energy Consumption per Ton of Heat Pump Capacity
  - Non-Pressurized Flow Center
  - Air Separation Chamber
  - Removable Lid for Easy Fill & Maintenance
  - 3 Year Limited Warranty
- **Accessories**
  - GV Zone Monitor (GVZM), a cost-effective way to further reduce energy consumption when no heat pumps are running.
  - GV Distribution Manifold (GVDM), a custom built distribution manifold that includes high performance zone valves.

GV06 Nominal 6 Ton Circulation Pump

The **GV06**, is a nominal 6 ton, variable speed, non-pressurized flow center, designed for use in multiple heat pump geothermal applications. When properly installed, the GV06 is self-regulated, using the minimum power necessary for supplying the optimal flow rate to each running heat pump (regardless of size or proximity to flow center).

Features:

4.5 Gal, Stainless Steel, Insulated Canister
1 1/4" FPT Brass Inlet & Outlet Connections
Pump
- Wilo Stratus 1.25 x 3-35
- Maximum Head : 36 feet
- 44.0 GPM
- Power Consumption : 16 - 310 W

Closed Nonpressurized Drainback Systems

- Closed and nonpressurized drainback systems can operate with water only, no glycol anti-freeze mixture is required.
- This approach can potentially reduce maintenance problems and it implies several other benefits, including:
  - No heat exchanger and associated decrease in performance.
  - Eliminating antifreeze also eliminates the annual fluid testing, and thus reduces system owning cost.
  - The collectors in a drainback combisystem do not contain fluid when they stagnate.
  - No need for a heat dump provision.
  - Elimination of the expansion tank.

No Heat Exchanger Penalty

- Antifreeze solutions require a heat exchanger between the collector subsystem and the water in the remainder of the system. Beside the fact that heat exchangers can add significant cost to the system, they also induce a performance penalty.
- All heat exchangers require a temperature differential to drive heat from their “hot” side to their “cool” side. In solar collection subsystems, the temperature differential shows up as an increase in collector inlet temperature relative to the water temperature near the bottom of the storage tank. This decreases collector efficiency.
- The magnitude of this performance penalty depends on the size of the heat exchanger. Larger, more expensive heat exchangers reduce the penalty, but never completely eliminate it.

Stagnation

- The collectors in a drainback combisystem do not contain fluid when they stagnate. A power outage, control failure or other condition that stops the collector loop circulator results in the water draining back from the collectors and exposed piping. This minimizes internal stresses on the collector relative to systems in which the fluid remains in the collector or flashes to vapor during stagnation.
- Because the collectors in a drainback system “dry stagnate,” there is no need for a heat dump provision. This is especially relevant to combisystems, which often have larger collector arrays compared to DHW-only systems, and thus have increased potential for warm weather stagnation due to the storage tank reaching a maximum temperature setting.

Elimination of Expansion Tank

- Many drainback systems eliminate the need for an expansion tank in the system.
- The air volume that accommodates drainback water, if properly sized, can serve as the expansion tank for the system.

Advantages of Glycol – Closed Systems

Cleanliness - Enclosed glycol systems are not exposed to the typical dirt and ambient particulate of water systems.

•**No Chemical Treatment -** Industrial grade glycol is formulated with anti-corrosion additives. The elimination of corrosion
greatly reduces maintenance costs.

•**No Filtration -** Since glycol systems are closed and dirt-free, no sidestream or full flow filtration is required. This eliminates the costs of filter maintenance and filtration pump power.

•**Maximum Heat Transfer -** Did you know that just 1/16" of scale reduces heat transfer by 40%! By keeping all equipment in like-new condition with no scale build-up, glycol guarantees constant peak performance and efficiency.

Disadvantages of Glycol

- **Cost** - Glycol systems are usually slightly more expensive than water systems. There is a one-time initial cost to fill the system with 30-40% glycol.
- **Convenience** - In cooling systems where components are frequently disconnected and reconnected, the glycol is typically captured and added back to the system.
- **Heat Exchangers**
- **Chemical Degradation**

Heat Exchangers

- One disadvantage of antifreeze-based systems is that a heat exchanger is required between the antifreeze solution in the collector circuit and the water in the remainder of the system.
- Any heat exchanger imposes a performance penalty on the system because it forces the collector circuit to operate at a temperature higher than that of the water near the bottom of the storage tank.
- The magnitude of this temperature difference depends on the sizing of the heat exchanger. The greater the internal surface of the heat exchanger is relative to the rate of heat transfer, the less the performance penalty.

Chemical Degradation

- Another disadvantage of antifreeze-based systems is that glycol-based antifreeze will chemically degrade and become acidic over time. In such a state, the fluid can cause internal corrosion of both piping and collectors, eventually leading to failure. This degradation is accelerated at higher temperatures.
- It is not good for glycol-based fluids to be maintained at high temperatures over long periods of time. This can happen in solar combisystems that generate far more heat in summer than is required by the load. It also implies that annual testing of the pH and reserve alkalinity of glycol-based antifreeze solutions is imperative.

Why Use Ventilation?

- Provide fresh air and healthy environment
- Remove odors
- Dilute indoor pollutants
- Lower indoor relative humidity

Air Circulation

- Adequate air circulation in a building ensures that dampness is minimized so that mildew and mold do not grow.
- This is especially important in an ICF structure where the shell is air-tight in contrast to stick-frame construction (which is one of the reasons for lower energy costs).
- Stick-frame structures often have ACH@50 greater than 7.

Heat Exchanger

- Proper air circulation can be accomplished by installing a heat (HRV) or energy recovery ventilation (ERV) system in conjunction with radiant heating, cooling, and hot water.
- Such HRV systems utilize a heat exchanger to transfer heat from outbound air to inbound air using geothermal loops similar to ground to air heat pump systems.
- This allows for preheating air in the winter and cooling it in the summer.

Managing Humidity

- To prevent moisture damage to a house, lower humidity levels are always preferable to higher humidity levels.
- In other words, dry is always better than damp. However, some people begin to complain if the indoor relative humidity is too dry — say, 20% or below.
- Of course, people have lived healthy lives for thousands of years in climates where the relative humidity is often below 20%, so it’s not entirely clear how low humidity levels are unhealthy.

Managing Humidity cont.

- Ventilation can only reduce the indoor relative humidity if the outdoor air is dryer than the indoor air.
- Since cold air can’t hold as much moisture as warm air, ventilating a house helps lower the indoor relative humidity only when it’s cold outside (or on dry days during the spring and fall).
- In most parts of the U.S., ventilation during hot weather actually introduces *more* moisture into the house — that is, it tends to raise rather than lower the indoor relative humidity.

Mechanical Ventilation Systems

- A balanced ventilation system with an HRV or an ERV is the preferred ventilation system for a Passivhaus building.
- Although balanced ventilation systems are relatively expensive to install, they have the lowest operating cost of any ventilation option.
- The purpose of an HRV or an ERV is to deliver fresh air to a home's interior without losing or using more energy via a heat exchanger.
- Neither appliance is designed to provide makeup air for combustion appliances or kitchen exhaust fans.

Ventilation Strategy

- Use state-of-the-art mechanical ventilation system (HRV or ERV >90% efficient)
- Design duct runs to maximize efficiency of the ventilation system while sharing ducts (and possibly ground to air coils) with forced air cooling provided by the geothermal heat pump.
- Eliminate all dedicated local exhaust systems for bathrooms, kitchens and laundry rooms that are ducted directly outside.
- Eliminate all other dedicated appliance exhausts that are ducted directly outside.

Minimum Requirements for Passive House Ventilation

- Air to Air Heat Exchanger must have:
  - Minimum 75% efficient heat recovery
  - Less than 0.8 watt/cfm, and
  - Meet a minimum air filtration level of F7
- Strongly encouraged by Passive House to use products that have electronically commutated motors

Minimum 75% Efficiency

- A 75% efficient unit exchanges 75% of the heat from the indoor air with the cold air coming inside.
- The closer that figure is to 100%, the closer the fresh, incoming air will be to the existing indoor temperature.
- Efficient electrical consumption is basically referring to the type of motor used in the ventilator.
- European models typically are using the most efficient DC motors available, while unit made in the US will suck a bit more power.

High Efficiency ERVs

- For optimizing energy efficiency in a Passive House design, there are two primary choices:
  - UltimateAir RecoupAerator 200DX ERV (which draws 40 watts to deliver 70 cfm, or 1.75 cfm/watt)
    - The RecoupAerator 200DX is 96% efficient
    - High efficiency electronically commutated motors
    - Capable of less than 0.8 Watt/CFM
    - MERV 12 Filtration
  - Venmar EKO 1.5 HRV (which draws 24 watts to deliver 49 cfm, or 2.04 cfm/watt).

Current PHPP inputs: RecoupAerator® 200DX

- Heat Recovery Efficiency--------- 83%
- Efficiency Humidity Recovery--- 43%
- Electric Efficiency---------- 72% watt/cfm via EC blower motor and state-of-the-art heat exchanger
- Total energy efficiency of ERV--- 96%

HVAC Coil & RecoupAerator

- A heating and cooling coil can be installed in the RecoupAerator to provide heating and cooling via the 2.5 GPM water flow rate:
  - Heating capacity at 160 °F is 8,777 Btu/hr
  - Cooling capacity at 40 °F is 2,000 Btu/hr
- Depending on the heating and cooling loads of a structure, inserting a coil into this ERV would allow it to provide heating and cooling in addition to heat exchanging, ventilation and air filtration.

RecoupAerator 200DX
Coil Performance Data

Test	Inlet Water °F	Water Flow GPM	Air Flow CFM	Inlet Air °F	Outlet Water °F	Outlet Air °F	DP Fan in. wg.	Capacity Btu/hr
Options For Post Heat (Space Conditioning)								
1	160	2.5	200	55	152.8	95.7	TBD	8,777
2	160	2.5	200	65	153.5	102.0	TBD	7,972
3	160	5.0	200	65	156.6	103.9	TBD	8,393
4	160	2.0	100	65	153.7	123.5	TBD	6,220
5	120	2.0	200	65	115.5	85.9	TBD	4,452
6	120	5.0	200	65	118.1	87.2	TBD	4,783
7	120	2.5	100	65	117.1	98.8	TBD	3,585
8	110	2.0	200	65	106.3	82.1	TBD	3,621
9	110	5.0	200	65	108.4	83.1	TBD	3,902
10	100	2.0	200	65	97.2	78.1	TBD	2,824
11	100	5.0	200	65	98.8	79.0	TBD	3,035

Integration with Hydronic Heat Pumps

- Geothermal heat pumps can be used to provide a conditioned water source to a coil inserted into the RecouperAerator ERV for provision of forced air heating and cooling.
- For tight envelopes and superinsulation provided by passive house construction via ICF technology, the ERV may be sufficient to meet peak heating and cooling loads.
- The integrated RecoupAerator ERV-GSHP-Air Handler that is currently under development is predicted to provide 3,000 to 13,000 Btu/hr heating capacity and would be ideal as a second stage of a solar thermal-GSHP-ERV hybrid heating, cooling and ventilation system.

High Efficiency Mechanical Ventilation (ERV or HRV)

- Ventilation systems can be either a Heat Recovery Ventilator (HRV) or Energy Recovery Ventilator (ERV), both of which can substantially reduce energy loss.
- HRV’s exchange heat only while ERV’s exchange both heat and humidity.
- UltimateAir’s state-of-the-art RecoupAerator ERV works equally well in humid or dry climates and helps prevent moisture buildup, particularly in bathrooms and/or when using radiant cooling.

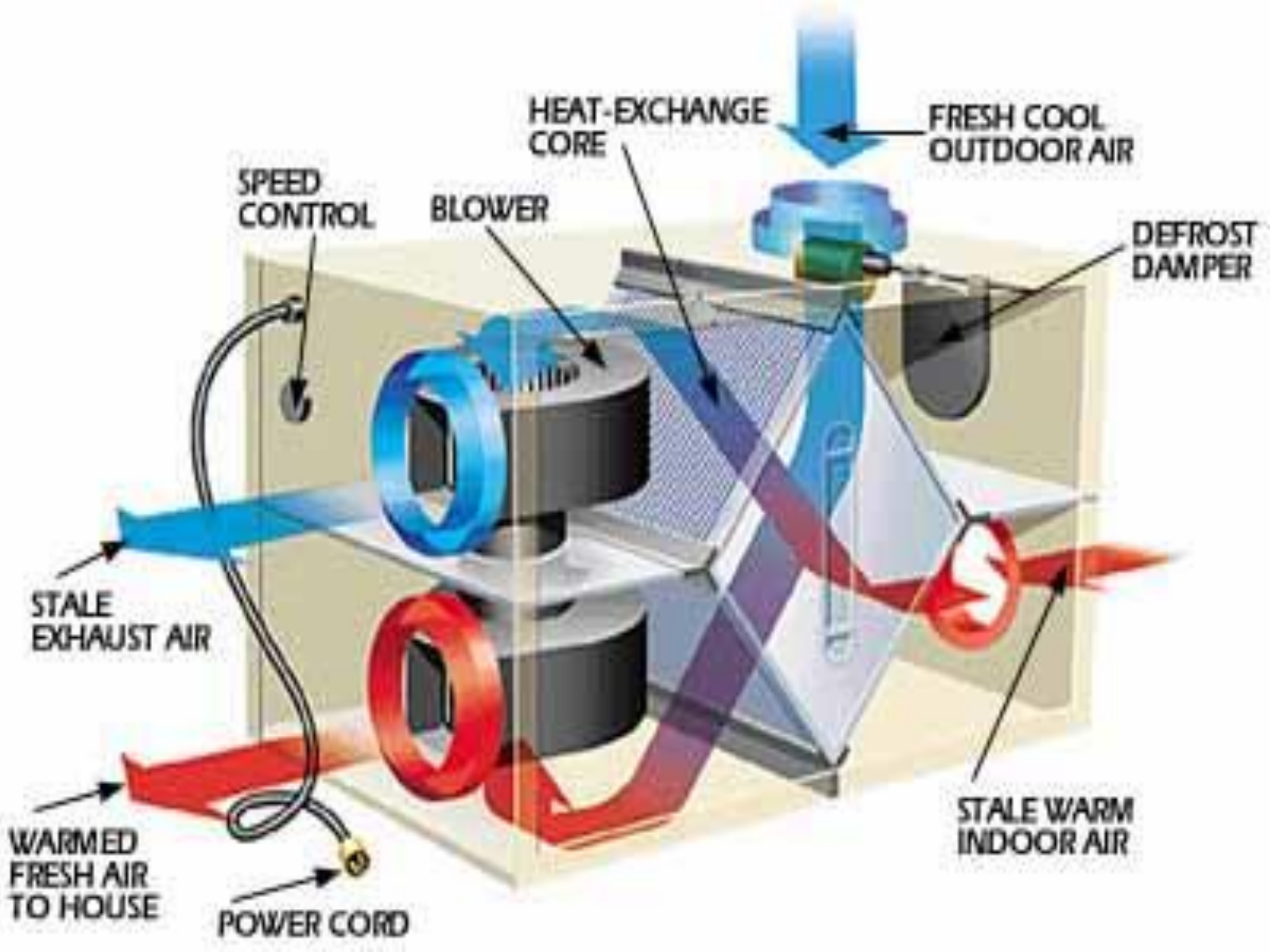
HEAT-EXCHANGE CORE
FRESH COOL OUTDOOR AIR
SPEED CONTROL
BLOWER
DEFROST DAMPER
STALE EXHAUST AIR
STALE WARM INDOOR AIR
WARMED FRESH AIR TO HOUSE
POWER CORD

HRV Technology

- Both the fresh air stream and the stale air stream flow through the HRV. The core of the appliance allows some of the heat from the warmer air stream (the stale air in winter, the fresh air in summer) to be transferred to the cooler air stream.
- In winter, in other words, the appliance “recovers” some of the heat that would have otherwise been exhausted. This heat transfer occurs without any mixing of the two air streams.

ERV Technology

- An ERV does everything that an HRV does. In addition, an ERV allows some of the moisture in the more humid air stream (usually the stale air in winter and the fresh air in summer) to be transferred to the air stream which is dryer.
- This transfer of moisture — called enthalpy transfer — occurs with very little mixing of the two air streams. (The cross contamination rate for one well-regarded ERV, the UltimateAir RecoupAerator, is 9.6%.)

UltimateAir® RecoupAerator 200DX

- The RecoupAerator 200DX is a whole-house air filter and ventilator that circulates fresh air into an average-sized home every two hours.
- It serves as both ventilation and filtration, capturing virtually all pollens and mold spores. This makes the RecoupAerator uniquely suited for asthmatics (MERV 12 filtration).
- It continuously exhausts stale air while capturing it’s temperature, conditioning and recycling it into the incoming fresh air.

RecoupAerator 200DX cont.

- Pre-filter: Washable aluminum mesh.
- Motor: General Electric ECM brushless motors. Electrical Rating: 120 VAC, 60 Hz., 6.0 amps. Mounting: Operates in vertical or horizontal position.
- May be suspended from joists or placed on floor or wall-mounted shelf. Connects to 6 inch ducts.
- The RecoupAerator® leads the air filtration industry with the highest energy recovery and highest filtration at the lowest amount of energy used.

EconoCool Feature

- **The Ultimate Air RecoupAerator** features an “EconoCool” feature that can be used during the summer to reduce cooling loads.
- Flick this switch on and the unit will recognize when the temp drops below 65° F and automatically shut off the energy recovery and begin swooshing cool night air directly into the house.
- In the summer time this feature can substantially reduce air conditioning loads when activated.
- Similar to capturing solar energy via windows in the winter, as much as 40% of energy lost during the warm season can be captured via cool nights in desert climates using this EconoCool feature.

Accommodating Multiple Floors

- Since the RecoupAerator is designed to move 200 CFM, it may be necessary to install more than one ERV to accommodate a basement, main floor and 2nd story.
- In this case, the geothermal heat pump could be integrated with the ERVs to provide forced air cooling for the main floor and 2nd story of the PHMH.

Passive House Duct Layout

- The ERV will remove (suck) stale air from the kitchen and bathrooms and deliver fresh air to bedrooms and living areas simultaneously.
- PHIUS (Passive House Institute US) consultants recommend categorizing suckers and blowers (technical postgreen terms) as follows:
  - Stale Air Exhausts (Suckers)
    - Bathrooms
    - Kitchen near Washer/Dryer
  - Fresh Air Inlets (Blowers)
    - Bedrooms
    - Living Room

Duct Layout Design

- Locate the ERV at a central location of the structure to minimize length of duct runs and keep air flow rate less than 10 ft/s.
- Minimize 90° angles and have straight runs as much as possible. Basically a 90° turn is equivalent in resistance to airflow as 25′ of straight duct and a 90° register termination can add as much as 80′ to calculations.
- Recommendations of both PHIUS and the manufacturer of the UltimateAir® ERV are as follows:
  - Keep it SHORT
  - Keep it STRAIGHT
  - Keep it SMOOTH

PHMH Strategic Floor Plan

- The floor plan of the PHMH will be developed to optimize duct layout:
  - Bathrooms and laundry room will be located in the same vicinity in order to share ducts.
  - Bathrooms on different floors will be located directly above and below each other.
  - Kitchens on different floors will also be located directly above each other.
  - The same goes for additional laundry rooms.

3D Duct Layout

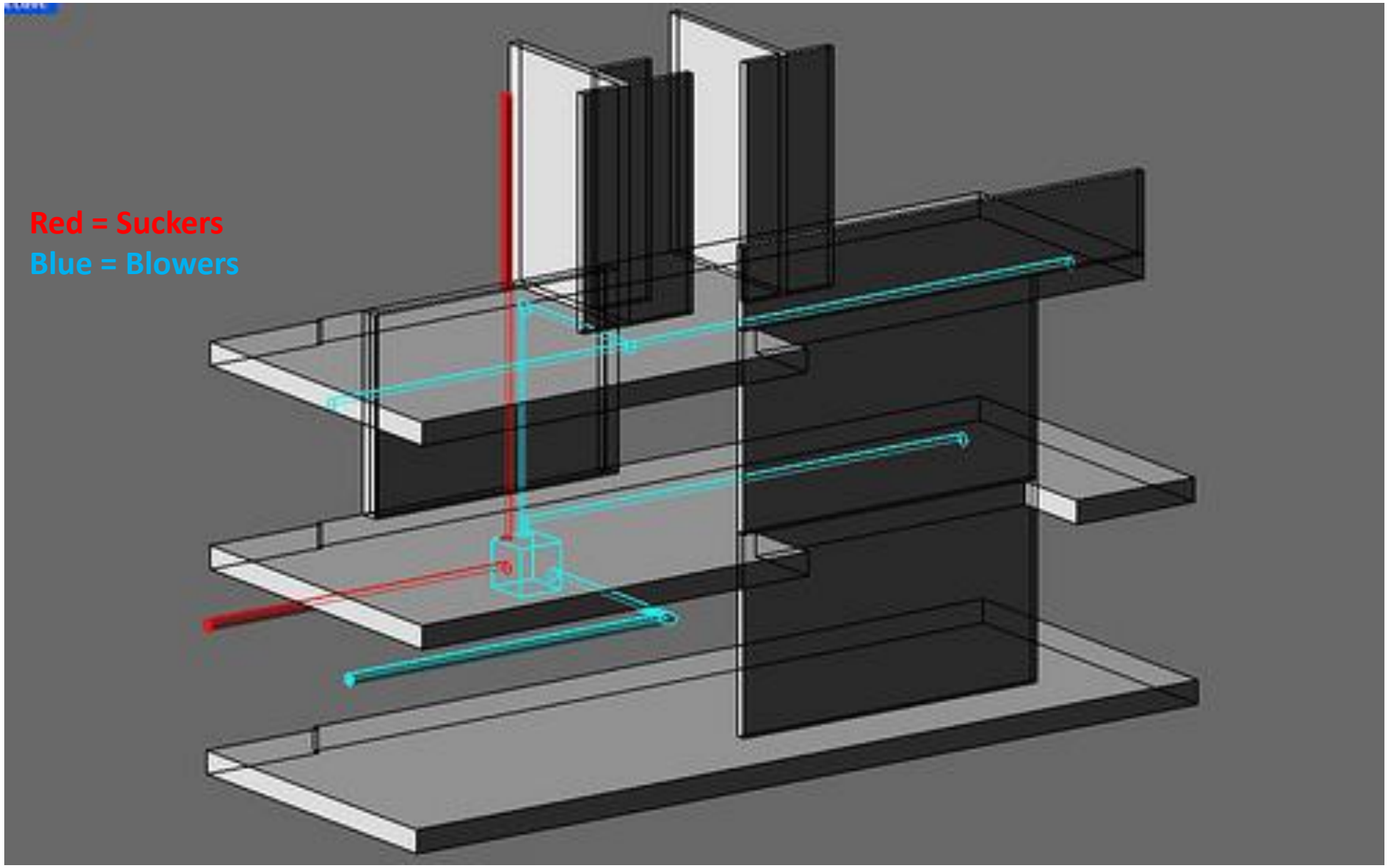

PHMH Duct/Utility Access

- Quad-Lock ICF will extend 2’ above the floor of the 2nd story. There will be a utility access for a 4/12 pitched roof measuring about 4’ high x 18” wide on the 2nd story of the PHMH, extending around the entire perimeter of the home.
- The blower ducts and exhaust ducts as well as forced air (for air conditioning of the main floor and bonus room) will service the main floor as well as the 2nd story through block-outs cut into the Quad-Deck ICF floor/ceiling which will provide strategic radiant heating and cooling to the basement, bathrooms, laundry room, and possibly the kitchen.

Optimizing ERV System Performance

- We will use smooth, hard duct and avoid flexible duct as much as possible.
- We will insulate the two lengths of duct running between the exterior and the ERV. This will prevent condensation from forming on these ducts.
- If noise is a concern, we will add one 3′ section of insulated flex duct to the supply side of the ERV. It will be installed as straight as possible and it will act as a silencer without the need to buy an expensive silencing duct section.

Eliminate Dedicated Local Exhaust

- Passive ventilation strategies require increasing the amount of intakes/exhausts inside and eliminating the local exhausts in bathrooms and kitchens.
- PHIUS highly recommends doing away with any local exhaust that is basically removing conditioned air directly out of the homes and replacing it with outdoor air (due to air-leakage).
- Eliminating local exhausts also reduces exterior penetrations through the home by at least two sources (more for multiple bathrooms).
- To compensate for the lack of dedicated local exhausts, intake vents will be installed in the bathrooms and kitchens.

ERV Boost Switch

- An ERV boost switch tied to the light switch will be installed in each of the bathrooms so that occupants can boost the ERV fan to max setting (around 200 CFM for UltimateAir’s RecoupAerator) while they are in use.
- Basically when you turn on your bath light, the ERV will automatically boost to high. When you leave the bath and turn off the light, the ERV will remain on boost for another 10-20 minutes to fully clear out remaining fumes.

Eliminate Exhausts for All Appliances

- This is less of a ventilation system design aspect and more of a whole house envelope and mechanical design strategy.
- By using the geothermal heat pump for hot water and a condensing dryer that does not require venting, we will eliminate all appliance ducting to the outside of the home.

Envelope Pressure Testing & PHIUS Certification

- Will be conducted by Jerry Peterson, Mechanical Plan Review / Inspector – City of Meridian and HVAC / Residential Energy Program Manager - Idaho Division of Building Safety.
- Jerry works with Idaho contractors to develop and/or modify the existing IECC 2012 and later versions for adoption by the State legislature.
- Jerry is a nationally accredited HERS Rater (RESNET, home auditor.

DWHR Technology

- Similar to an ERV, drain water heat recovery (DWHR) technologies allow for conservation of thermal energy.
- Production of DHW accounts for 20-30% of the total energy required for residential applications.
- Drain water contains 90% of the heat generated by a solar or domestic hot water system.

Drain Water Heat Recovery (DWHR)

- Recovering heat from drain water can reduce the energy required for producing domestic hot water by up to 35%, e.g., providing a total home energy savings of 3-6% for equal flow plumbing for solar thermal applications (connected to both the DHW heater and the fixture).
- This technology has been developed and used in Canada for over 50 years. It is non-fouling and maintenance-free.
- The technology is based on the high efficiency of heat transfer for falling film heat exchangers which take advantage of the turbulence created by the velocity of drain water.

DWHR Concrete Cistern

- A cost effective method of drain water heat recovery is as simple as centralizing hot wastewater collection from showers, sinks, kitchen and laundry rooms to an insulated concrete cistern, possibly with a heat exchanger coil.
- This method is considerably more efficient than vertical counter-flow heat extraction technologies, and considerably less expensive.
- Locating the concrete cistern next to the hot water buffer tank/concrete cistern under the basement floor allows for capturing all of the warm wastewater from the entire structure, not just for the main and upper floors.

Comparing the Power-Pipe® to other energy saving options

	ENERGY SAVINGS	RETURN ON INVESTMENT†
Power-Pipe® Model R3-60	25 - 35%*	10 - 50%
On-Demand (Tankless)	9 - 18%‡	3 - 12%
Solar Water Heating	35 - 55%	3 - 6%

Breakdown of Energy Consumption in Homes

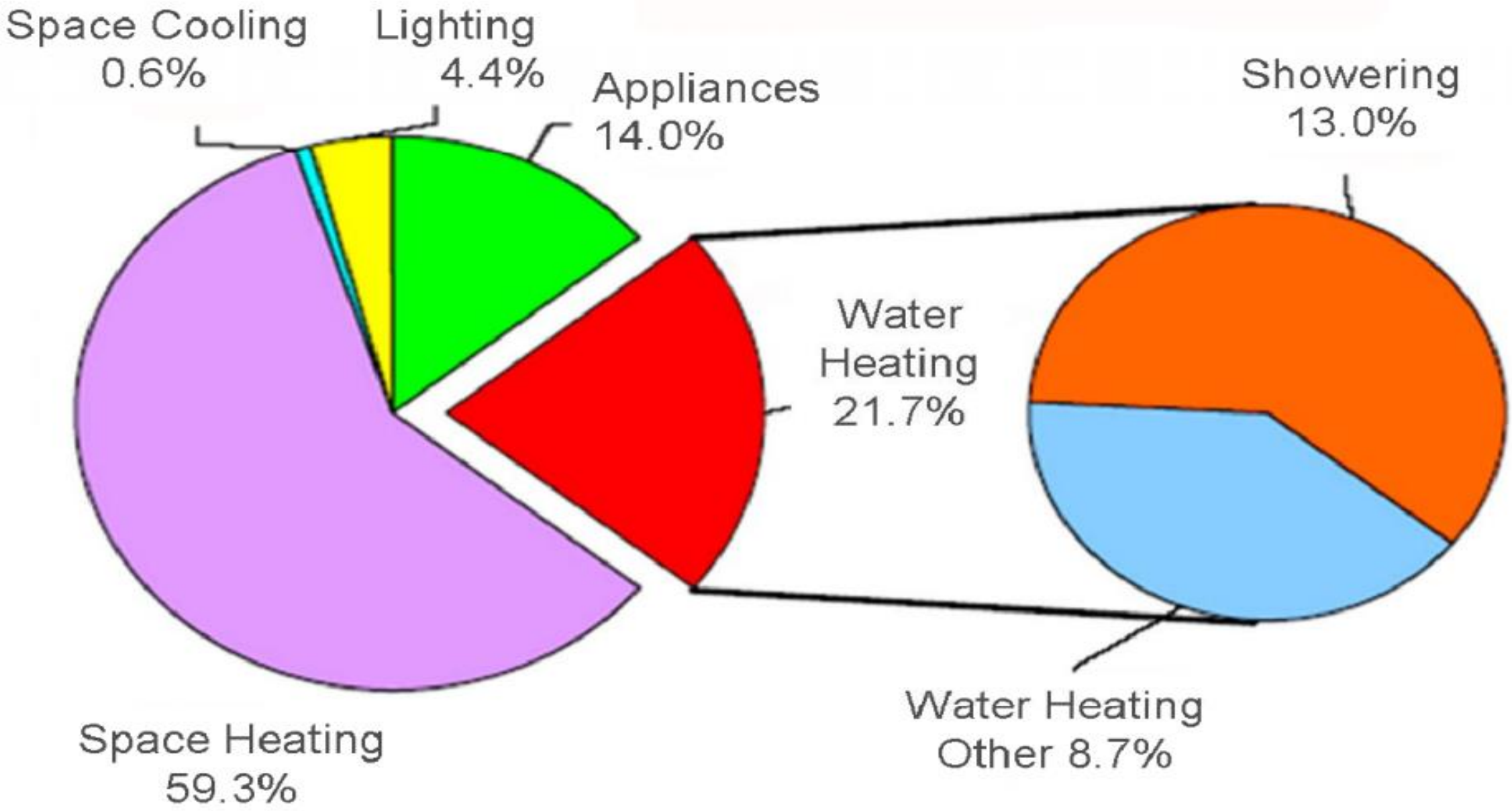

Example of Heat Loss for Dishwasher

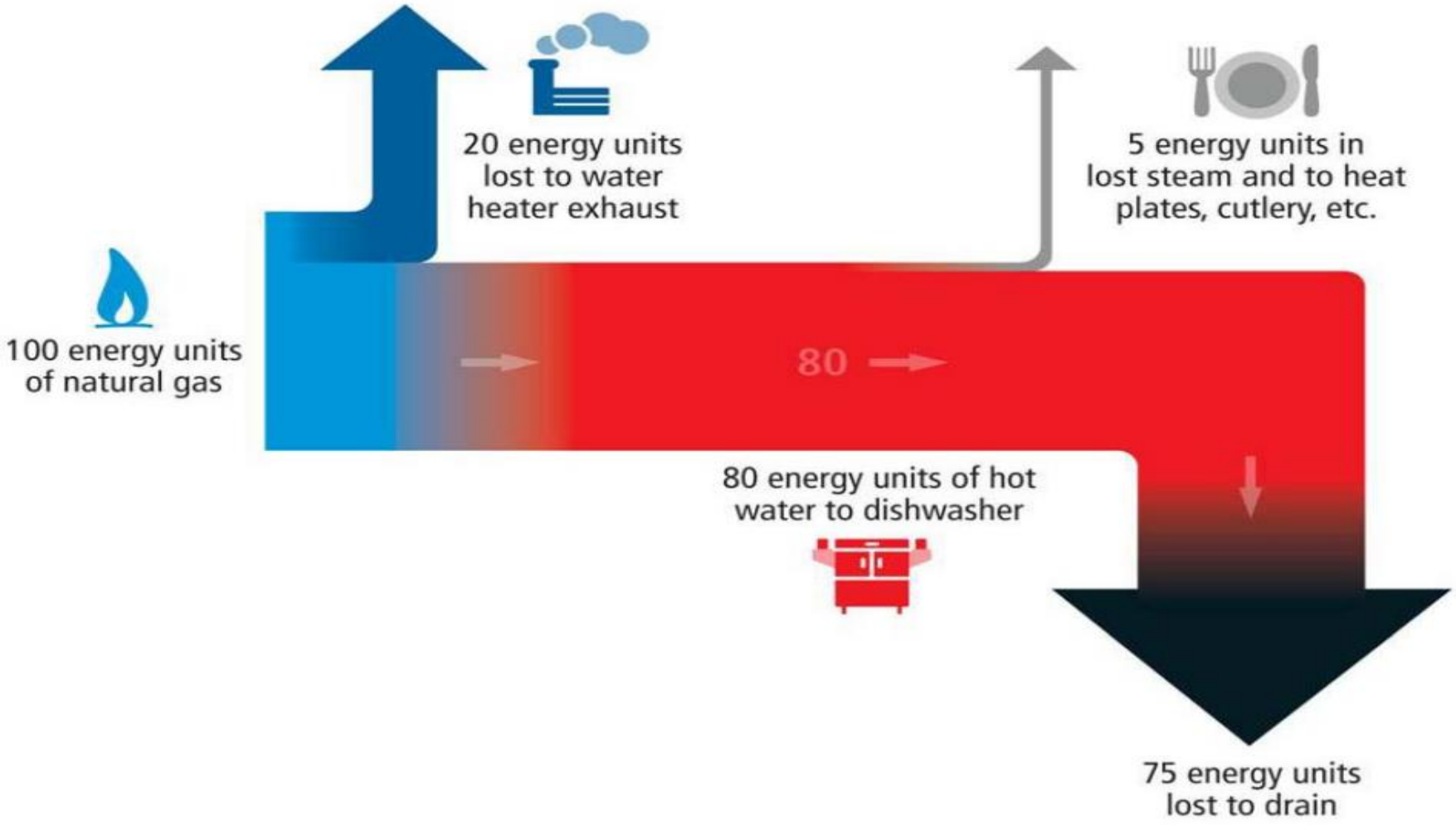

Conservation of Dishwasher Heat Loss

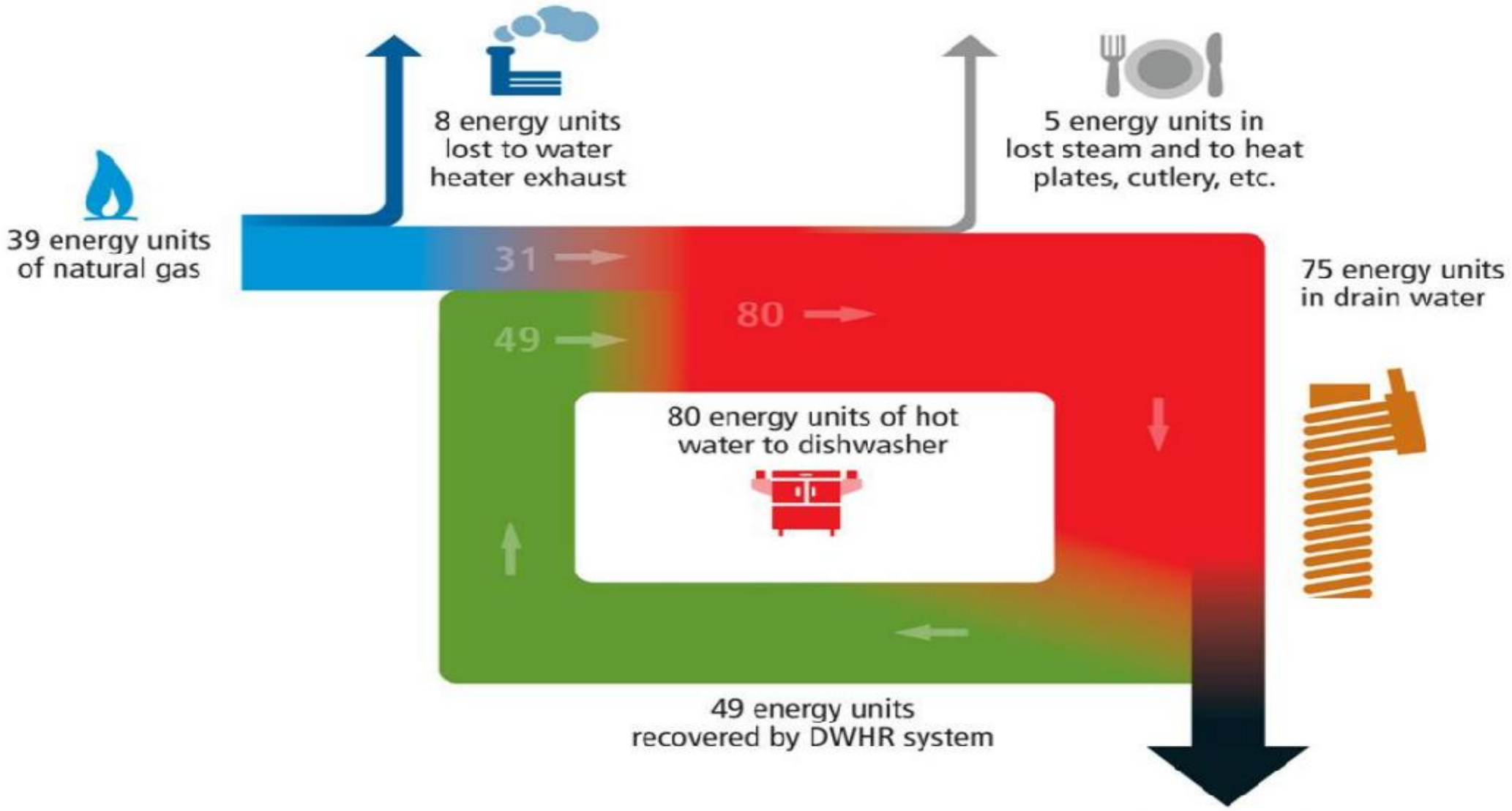

Falling Film Heat Exchangers

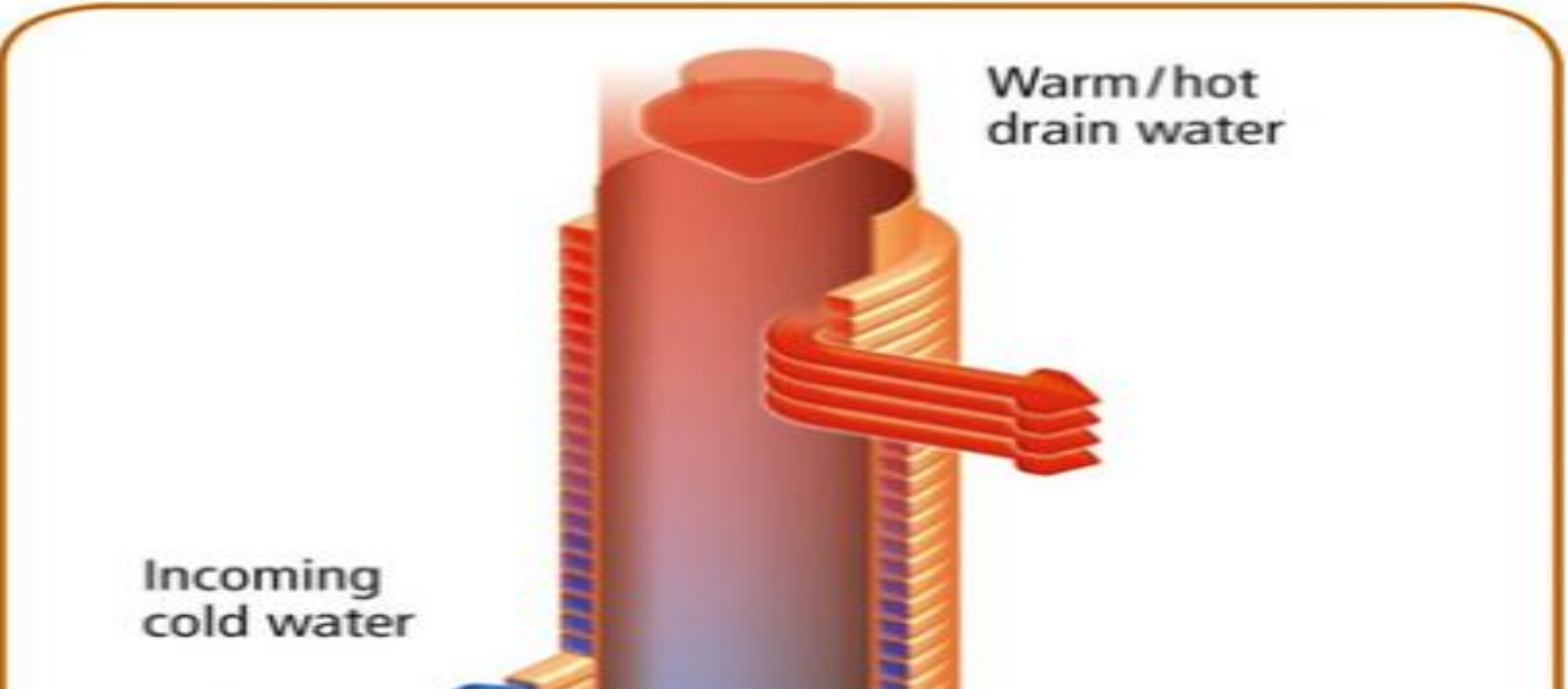

Power-Pipe® Drain Water Heat Recovery

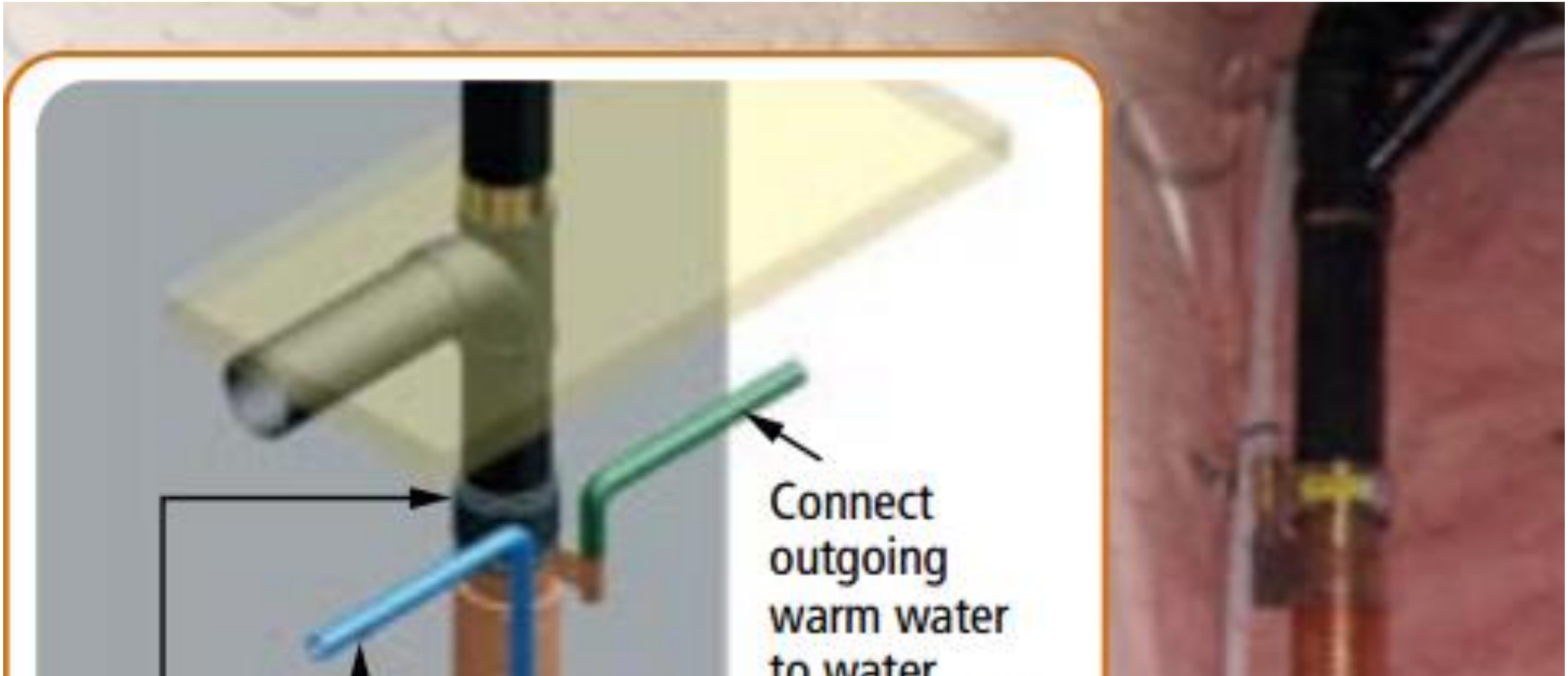

Equal Flow Configuration – Highest Efficiency Provides an annual 50% ROI for 5 People

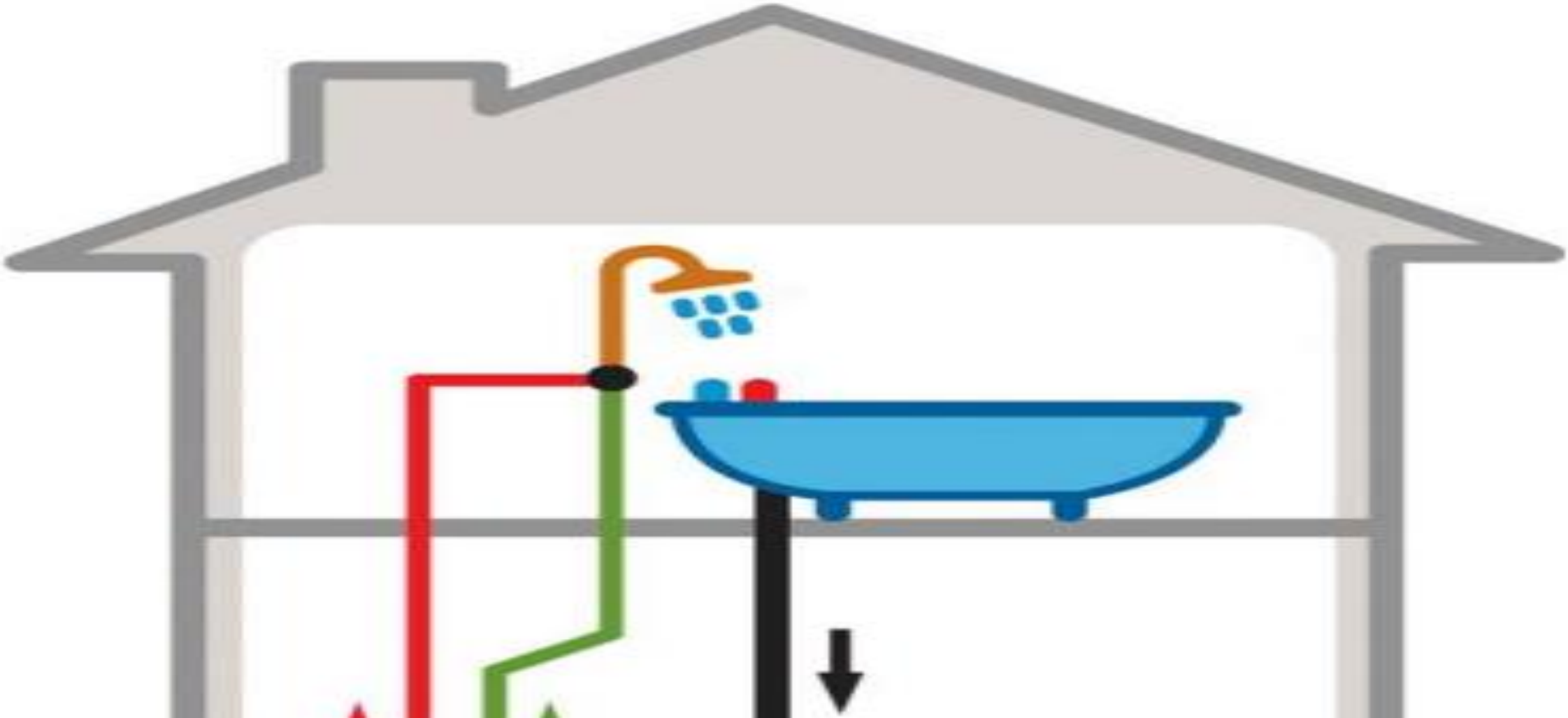

Heat Pump Technology

- For climates with moderate heating and cooling needs, heat pumps offer an energy-efficient alternative to furnaces and air conditioners.
- Like refrigerators, heat pumps use electricity to move heat from a cool space to a warm space, making the cool space cooler and the warm space warmer.
- Unlike refrigerators, heat pumps can run in reverse mode, producing both hot and cold water.

Heat Pump Basic Principles

A heat pump is a practical application of the basic principles of refrigeration

Evaporation

- Heat is absorbed from the source

Condensation

- Heat is released to the load

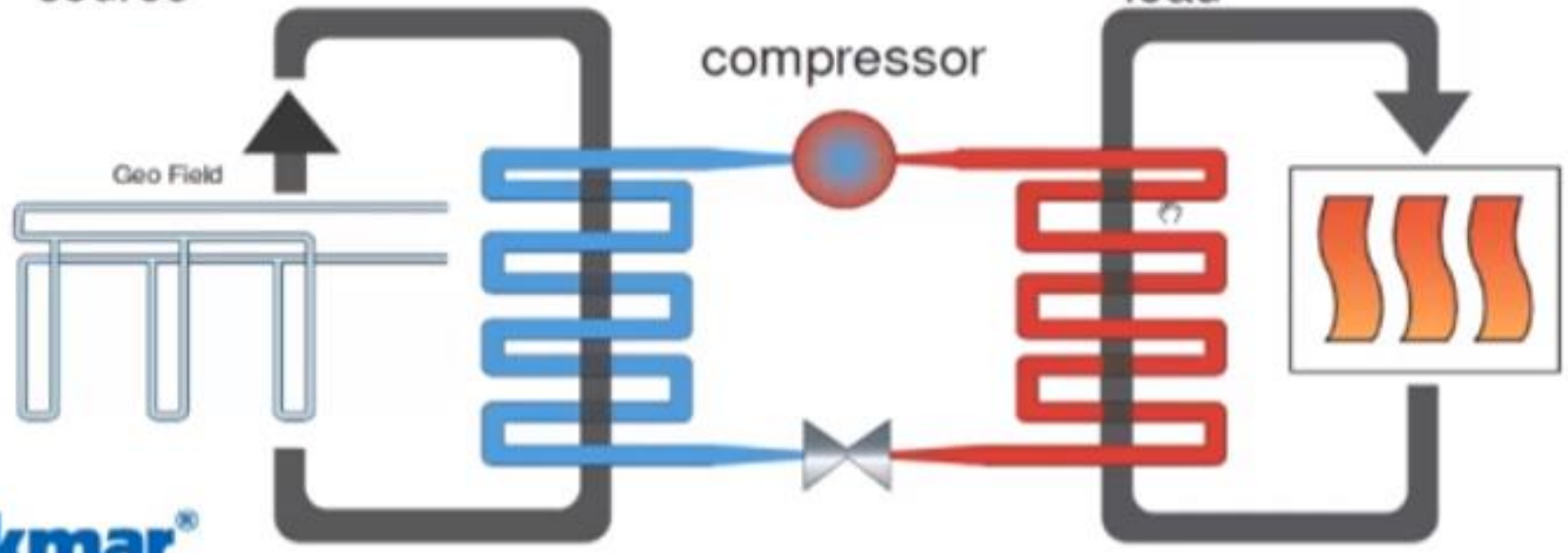

tekmar®

High Efficiency GSHPs

- Mid-range efficiency GSHP units employ scroll compressors or advanced reciprocating compressors.
- Units in the high efficiency range tend to use two-speed compressors or variable-speed indoor electrically commutated fan motors or both, with more or less the same heat exchangers.
- Desuperheaters are usually included in high efficiency GSHP systems.

Closed Loop GSHP Energy Efficiency Range

(at an entering antifreeze temperature of 0˚C)

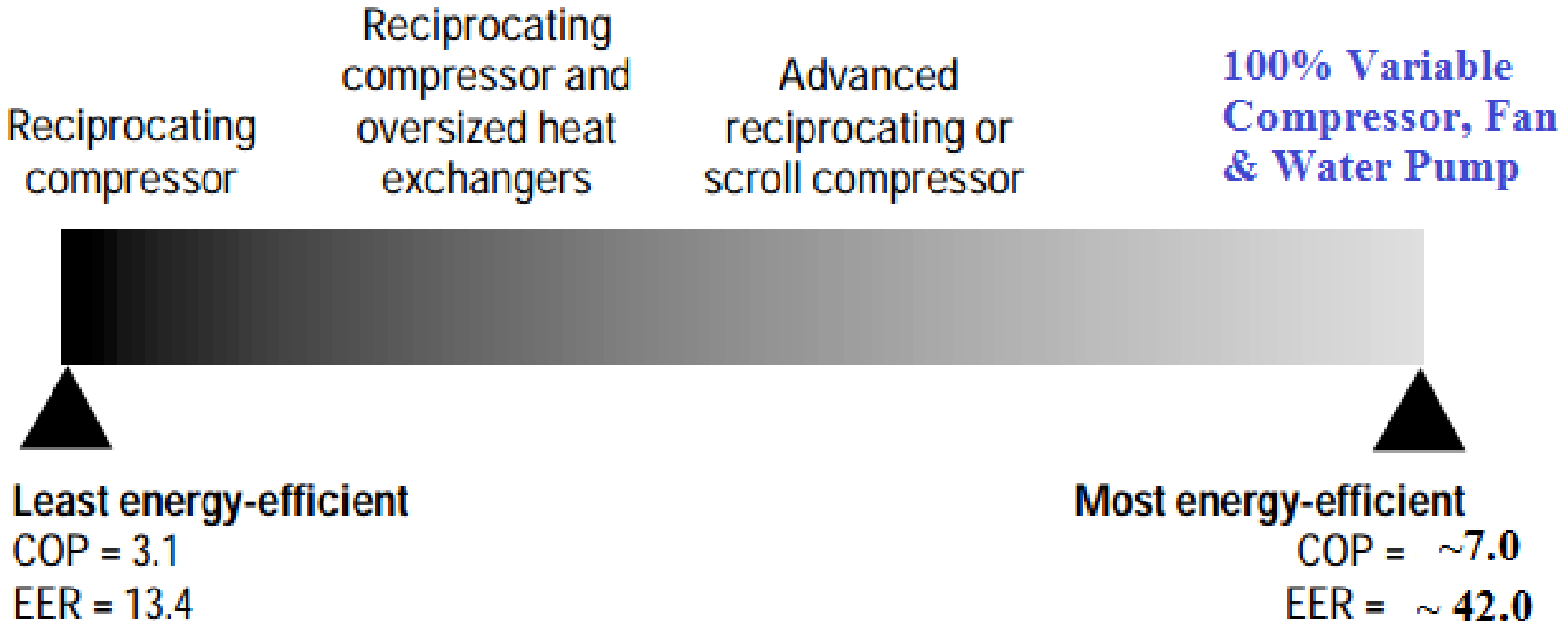

Note: Indicated values represent the range of all available equipment.

Constant Output of GSHPs

- Unlike the outside air, the temperature of the ground remains fairly constant. As a result, the output of a reversible GSHP varies little throughout the winter or summer.
- Since the GSHP’s output is relatively constant, it can be designed to meet almost all the space heating requirement – with enough capacity left to provide domestic water heating.

Sizing & ROI for Integrated Solar-GSHP Systems

- Similar to air-source heat pumps, it is generally not recommended to size a GSHP to meet 100% of a structure's heating and cooling loads due primarily to cost.
- However, when integrated with solar thermal, radiant heating and cooling, passive ground source cooling, an integrated GSHP system can provide a relatively rapid ROI, e.g., less than ten years when strategically installed.
- Sizing 100% variable GSHP units to meet 150% of peak heating and cooling loads can actually increase COP and EER of the integrated unit which will operate well below peak capacity most of the year.

Desuperheater

- Some heat pumps are equipped with a secondary heat exchanger that takes heat from the hot refrigerant after it leaves the compressor.
- It transfers heat from the earth in the winter, and from the structure in the summer, into a domestic hot water tank.
- The desuperheater is often part of the geothermal heat pump's domestic hot water generating system (HWG).

Components of a GSHP System Including Desuperheater

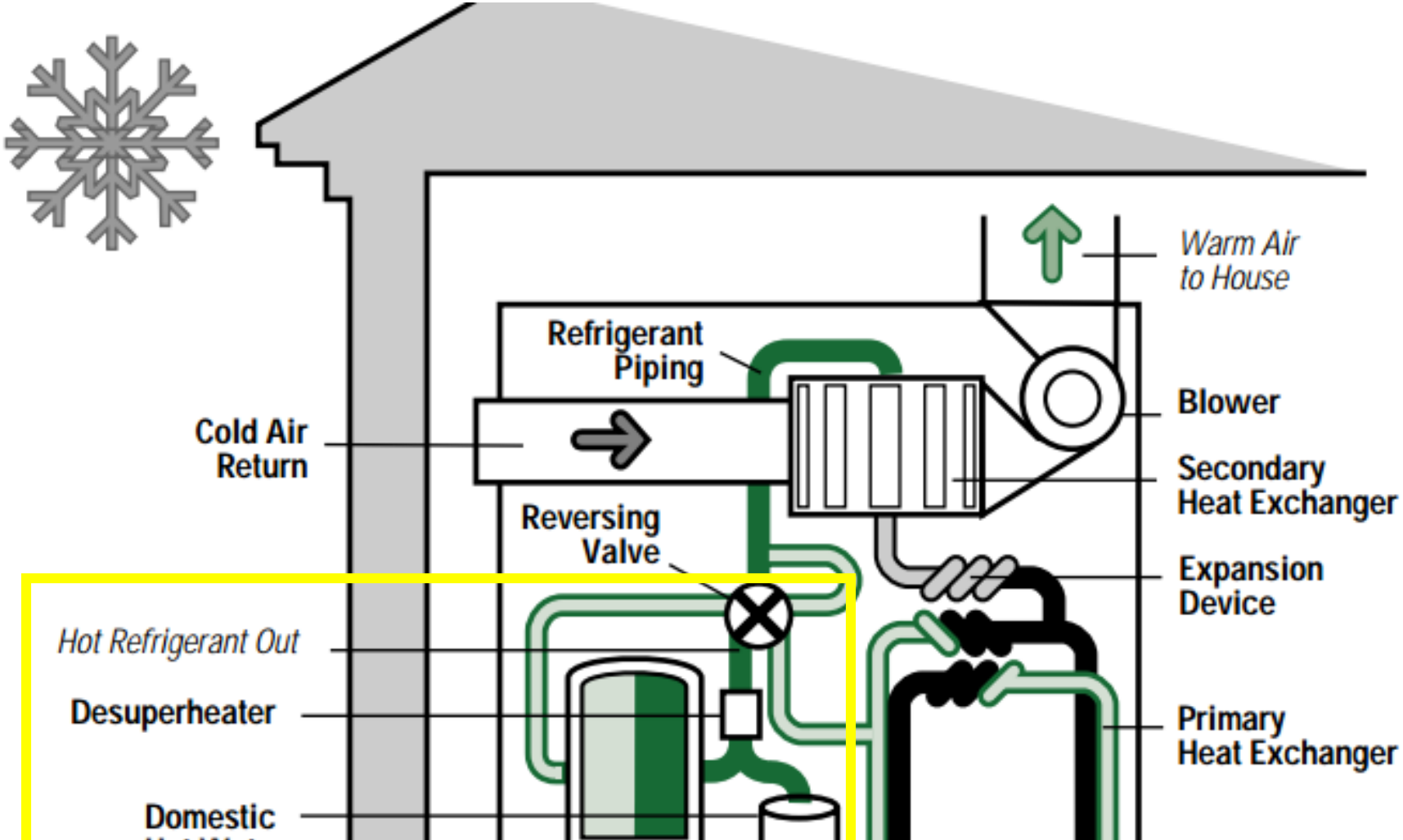

Single Tank Desuperheater Schematic

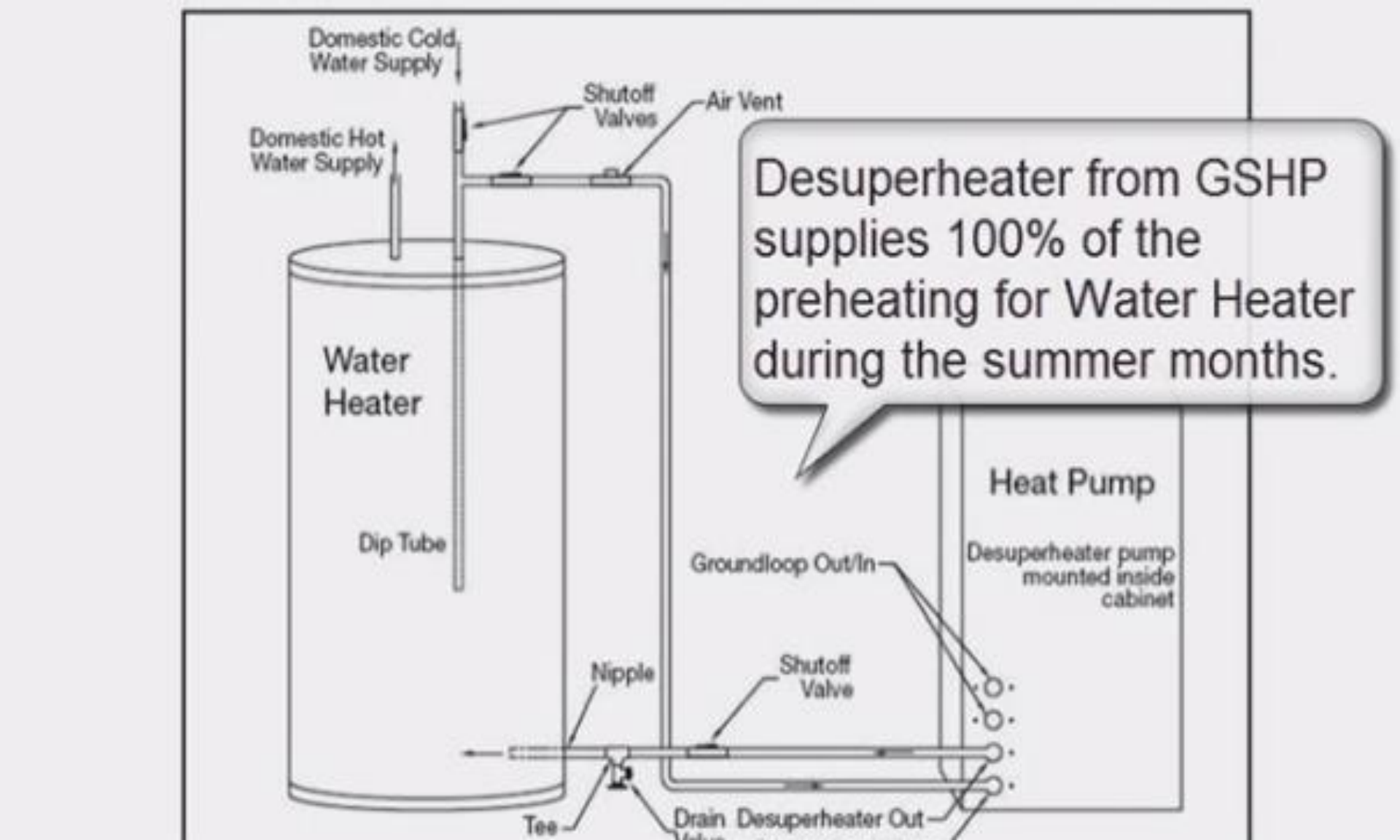

Domestic Hot Water (DHW)

- Hot water generators only heat domestic water when the geothermal heat pump is heating or cooling the structure.
- The hot water circulating pump moves cold water from the bottom of the hot water tank through a water pipe to the desuperheater where the water is heated by the thermal energy that has been transferred from the earth during the heating cycle, and from the inside of the structure during the cooling cycle.
- The heated water is then circulated back into the hot water tank.

15% Savings vs. CNG

- Heating water with a geothermal heat pump's hot water generator costs about 80% less in a heating dominated climate, and up to 95% less in a cooling dominated climate, than if you heat your domestic water with an electric, oil, or propane fired hot water heater.
- At the present cost of natural gas the savings is about 15% less.

Low Cost DHW

- In the summer heating domestic water is almost free since the heat that is being removed from the structure is transferred to the hot water tank.
- Since this heat was going to be rejected into the earth, redirecting it to the hot water tank is cost free. The only cost for the summer water heating is the small cost of running the circulating pump that moves the water.

Moving vs. Generating Heat

- During the heating season, heat pumps move heat from the cool outdoors (air, water or soil) into the insulated structure during the cooling season, heat pumps move heat from the insulated structure into the warm outdoors.
- Because they move heat rather than generate heat, heat pumps can provide up to 4 times the amount of energy they consume.
- Geothermal heat pumps function as heat sinks in the summer and as heat sources in the winter.

Transporting vs. Creating Heat

By ***moving heat*** instead of ***making heat***, well-designed geothermal systems significantly reduce energy consumption.

tekmar®

Heat Pump Efficiency

- The most common type of heat pump is the air-source heat pump, which transfers heat between the structure and the outside air. However, it is also the least efficient.
- Water and ground source (geothermal) heat pumps (GSHPs), which utilize the relatively constant temperature of the earth are considerably more efficient, are becoming increasingly popular, particularly for low cost installation of horizontal field loops around the footings of energy efficient structures.
- In contrast to heating with electricity, a heat pump can trim the amount of electricity used for heating by 30% to 65%.

Types of Heat Pumps

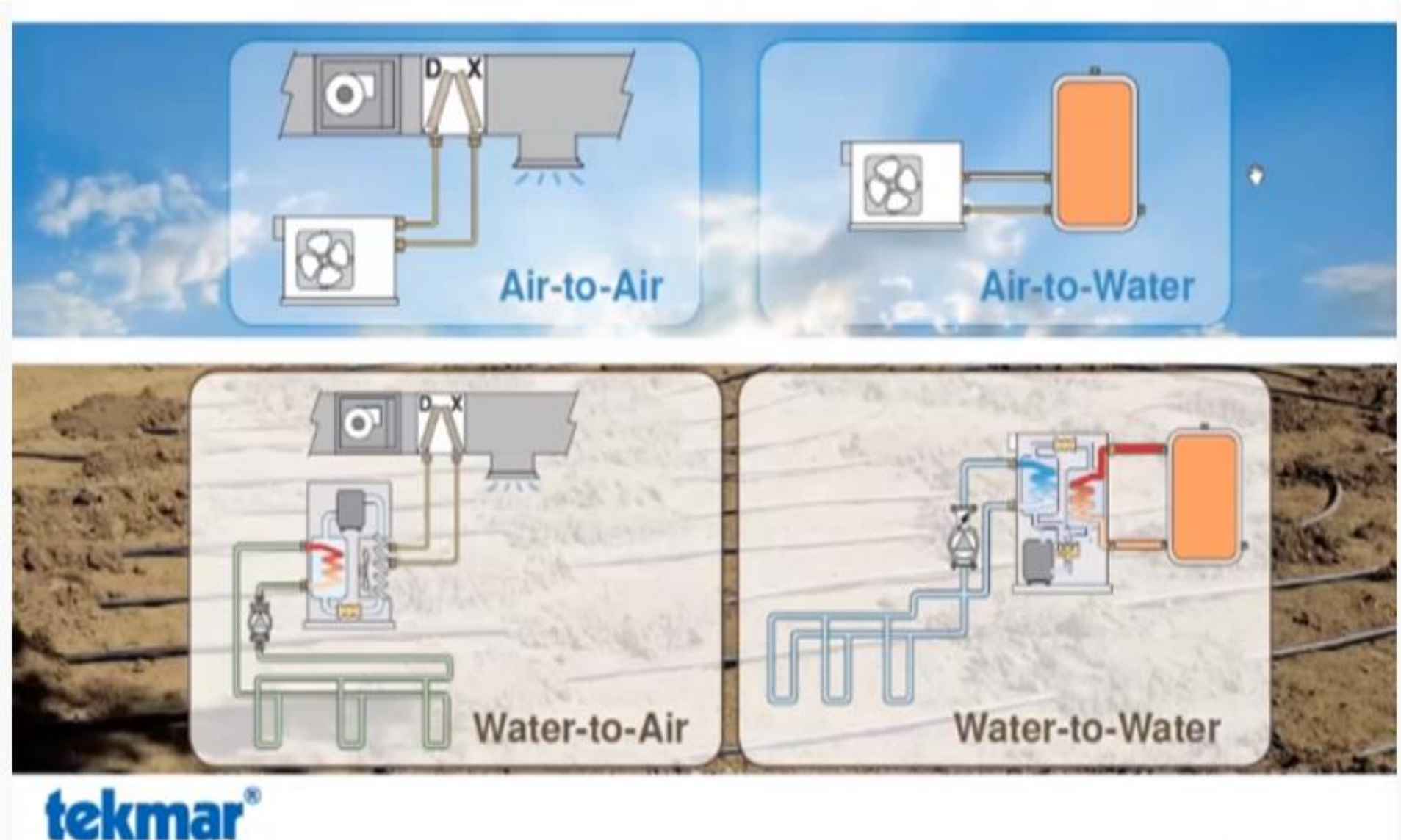

Water & Ground vs. Air Source Heat Pumps

- High-efficiency heat pumps dehumidify better than standard central air conditioners, resulting in less energy usage and more cooling comfort in summer months.
- However, the efficiency of most air-source heat pumps as a heat source drops dramatically at low temperatures, generally making them unsuitable for cold climates (although there are some systems that can overcome this problem).

Geothermal Heat Pumps

- Geothermal (ground-source or water-source) heat pumps achieve higher efficiencies by transferring heat between a structure and the ground or a nearby water source.
- Although they can cost more to install, geothermal heat pumps have low operating costs because they take advantage of relatively constant ground or water temperatures.

Ground-Source Heat Pumps

- Whether a geothermal heat pump is appropriate for a particular site depends on the size of the lot, the subsoil, and the landscape.
- Ground-source or water-source heat pumps can be used in more extreme climates than air-source heat pumps, and customer satisfaction with the systems is very high.
- GSHP are about 30% more efficient than air-source heat pumps due to the constant temperature of the soil and the higher efficiency of water to transport thermal energy.
- For integration of GSHP and low temperature radiant systems, the increase in energy efficiency can be over 50%.

GSHP - Closed Loop Systems

- A closed-loop system draws heat from the ground itself, using a continuous loop of special buried plastic pipe. Copper tubing is used in the case of DX systems.
- The pipe is connected to the indoor heat pump to form a sealed underground loop through which an antifreeze solution or refrigerant is circulated.
- While an open system drains water from a well, a closed-loop system recirculates its heat transfer solution in pressurized pipe.

Slinky Loop Field

- Requires less land area than horizontal loop

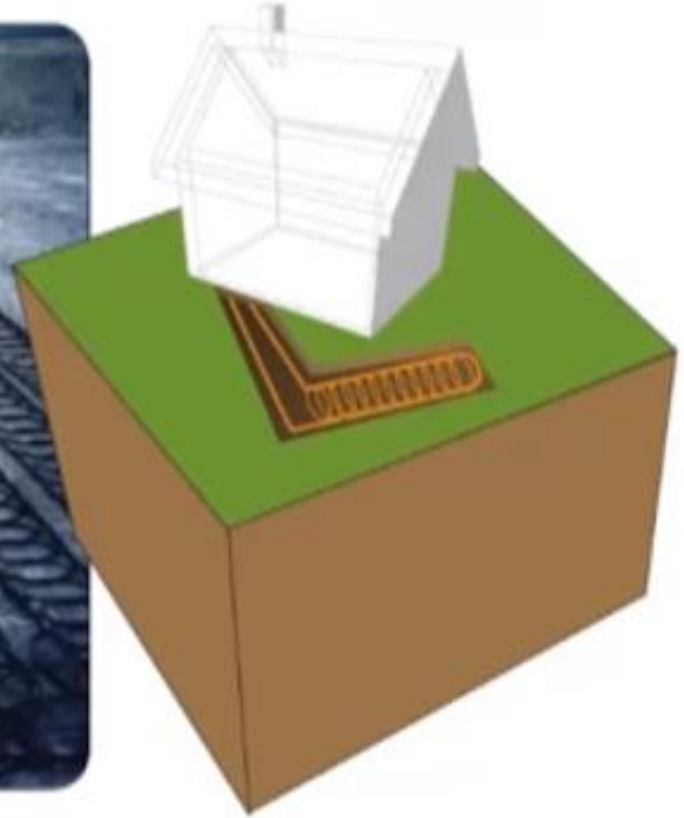

tekmar®

Closed Loop Fields

- For installation of vertical closed field loops, about 80 to 110 m (270 to 350 ft.) of piping is needed for every ton (3.5 kW or 12,000 Btu/h) of heat pump capacity. U-shaped loops of pipe are inserted into the holes. DX systems can have smaller diameter holes, which can lower drilling costs.
- For horizontal closed field loops buried below the frost line, preferably 8’ deep where the ground temperature remains fairly constant, 120-180 m (400-600 ft.) are required per ton of heat pump capacity.
- Slinky loop fields require ~600-800’ of pipe but only 125-150’ of trenching per ton of HVAC load.

Net Zero Energy Homes

- By reducing heating and cooling loads by up to 95%, less than two tons of HVAC capacity may be required for most households.
- This allows for installing a sufficient volume of horizontal slinky loops around the footings of new homes to accommodate 100% of peak heating loads plus DHW.
- ROI can range 3-5 years for an integrated system installed in a Passive House or NZE home with COPs near 7 and EER’s near 40 for properly designed GSHP and distribution systems.

Natural Gas & Electric Heat Pumps

Gas powered air source and water source heat pumps are an alternative to traditional electric heat pumps.

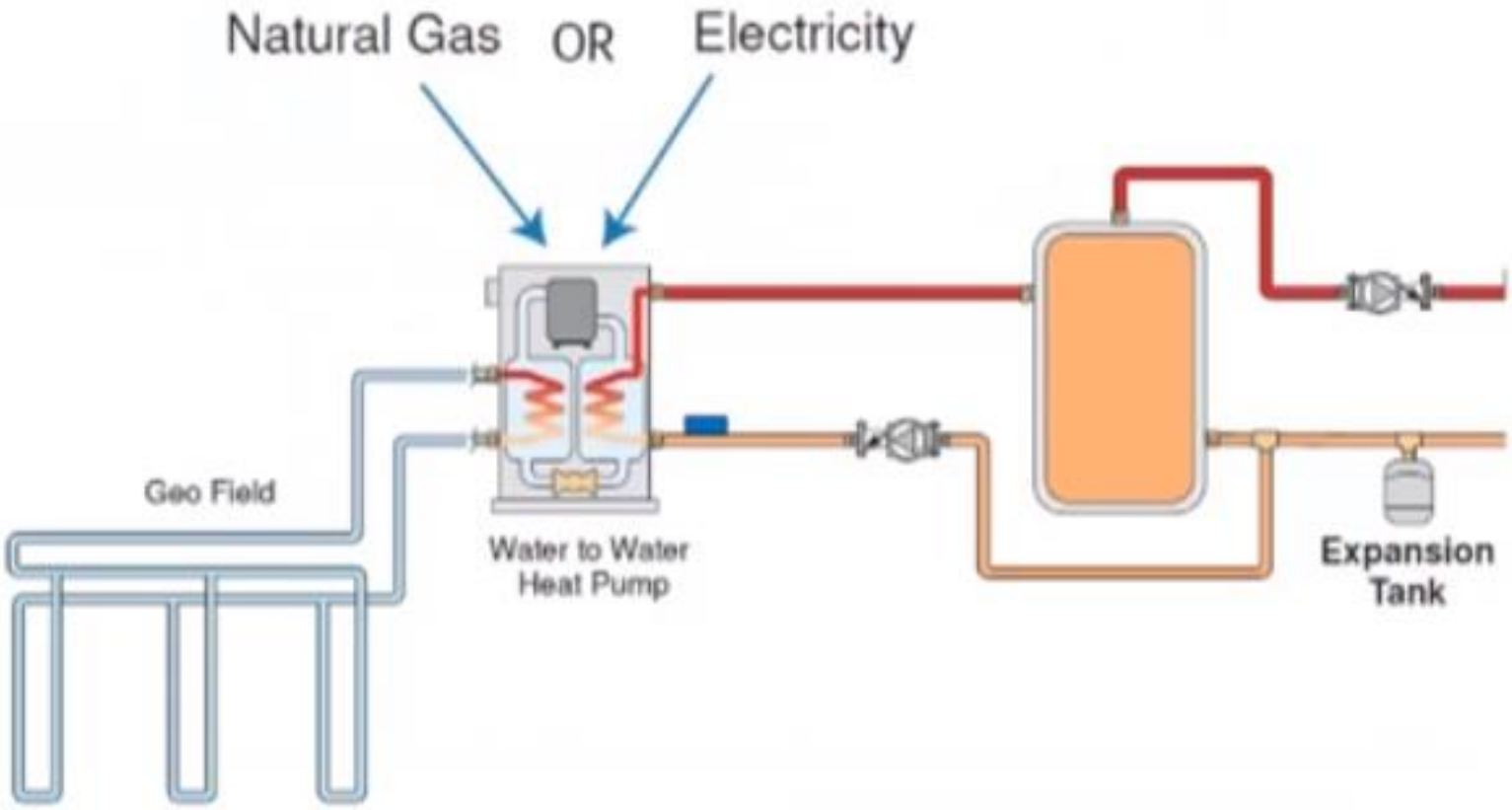

Natural Gas vs. Electric GSHP

- Natural gas powered heat pumps use CNG instead of traditional electricity to run the compressor.
- Natural gas heat pumps allow for using natural refrigerants such as ammonia and water instead of commercial or industrial refrigerants.
- Obviously, natural gas heat pumps require purchasing CNG while electricity allows for achieving NZE homes with the use of solar PV power systems, either grid connected or off-grid with batteries for storing power.

Geothermal Heat Pump Basics

1. Energy from the sun warms the ground
2. Fluid in the heat exchanger piping absorbs heat from the ground
3. Loop piping carries heat into the building
4. Geothermal heat pump transfers heat to the home

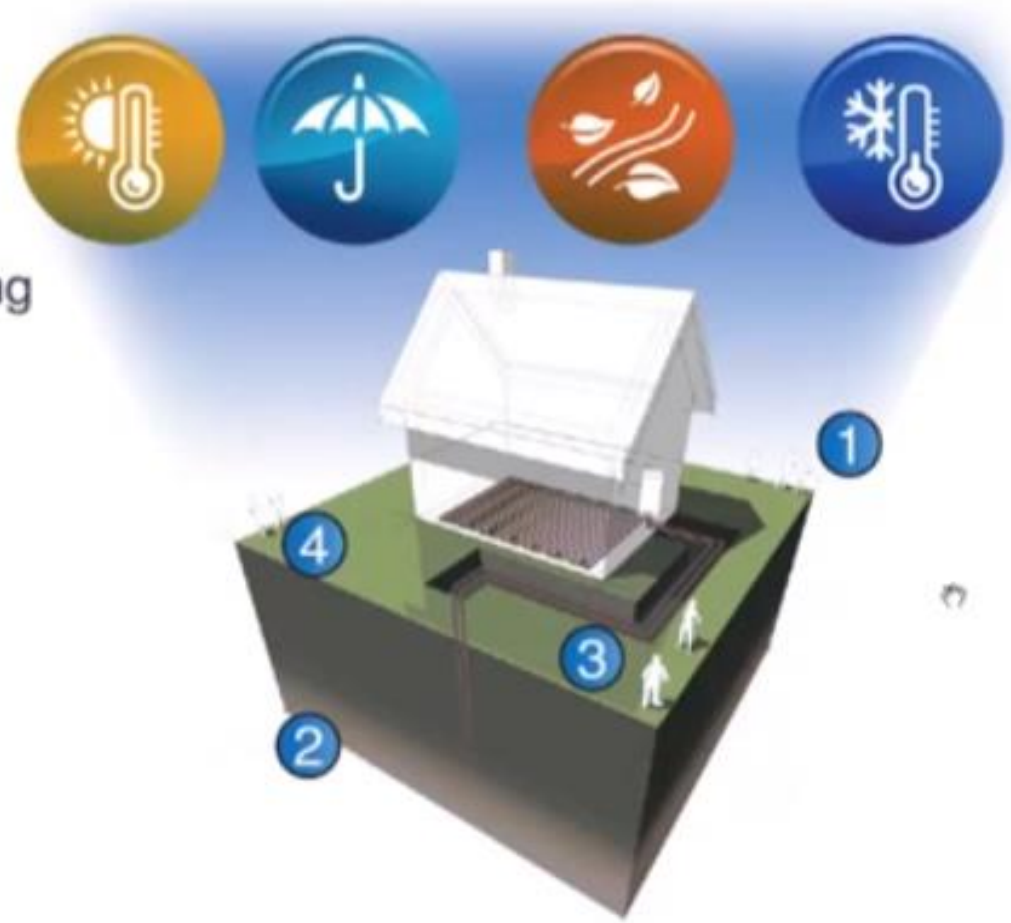

tekmar®

Efficiency of Geothermal Heat Pumps

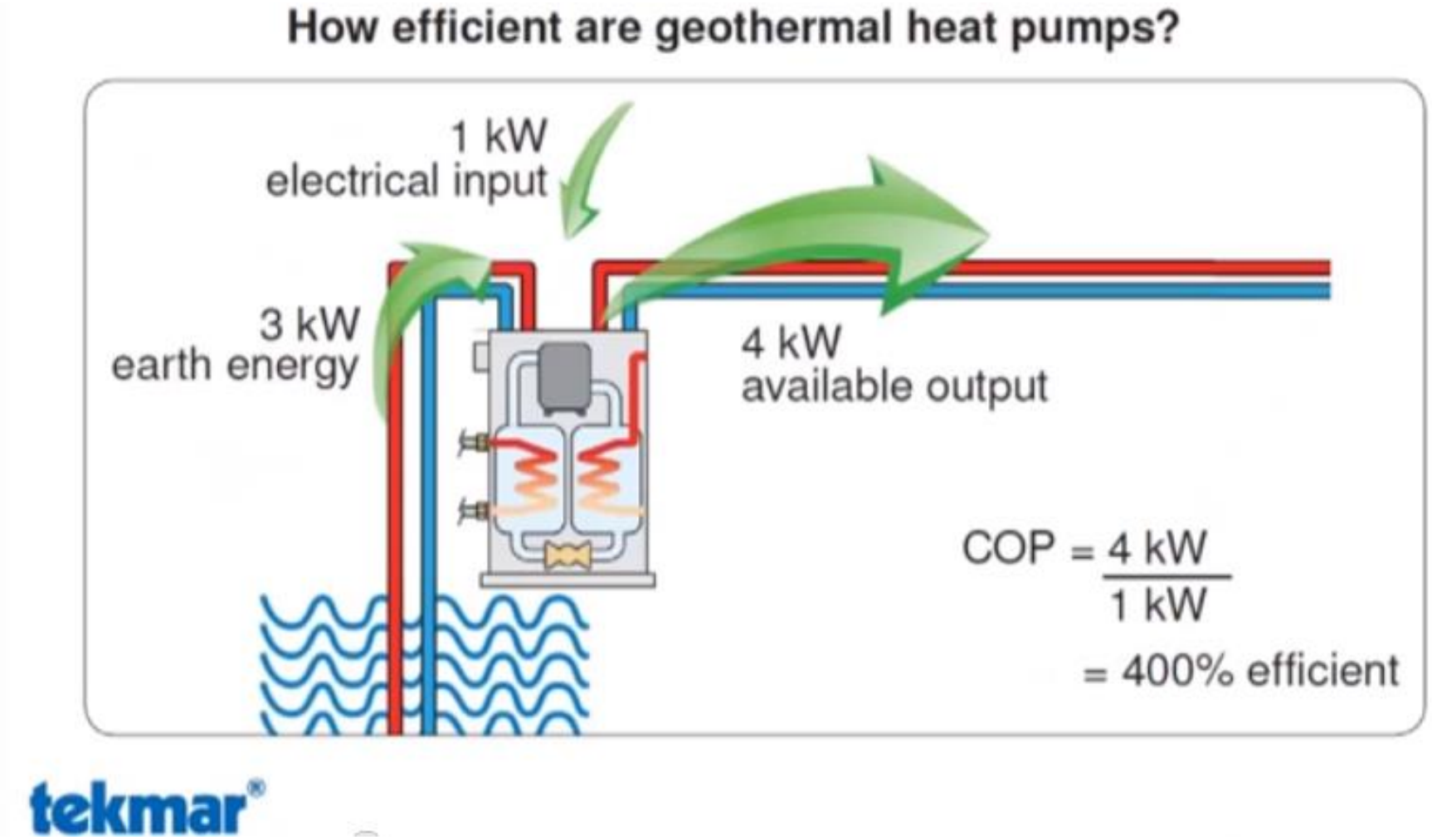

High Efficiency GSHPs

- COP refers to the heating mode of GSHPs.
- Some GSHP manufacturers are producing units with COPs of as high as 7.0, e.g., 700% efficient.
- This substantially higher than your typical 98% high efficiency natural gas furnace.

Basic Heat Pump Cycle

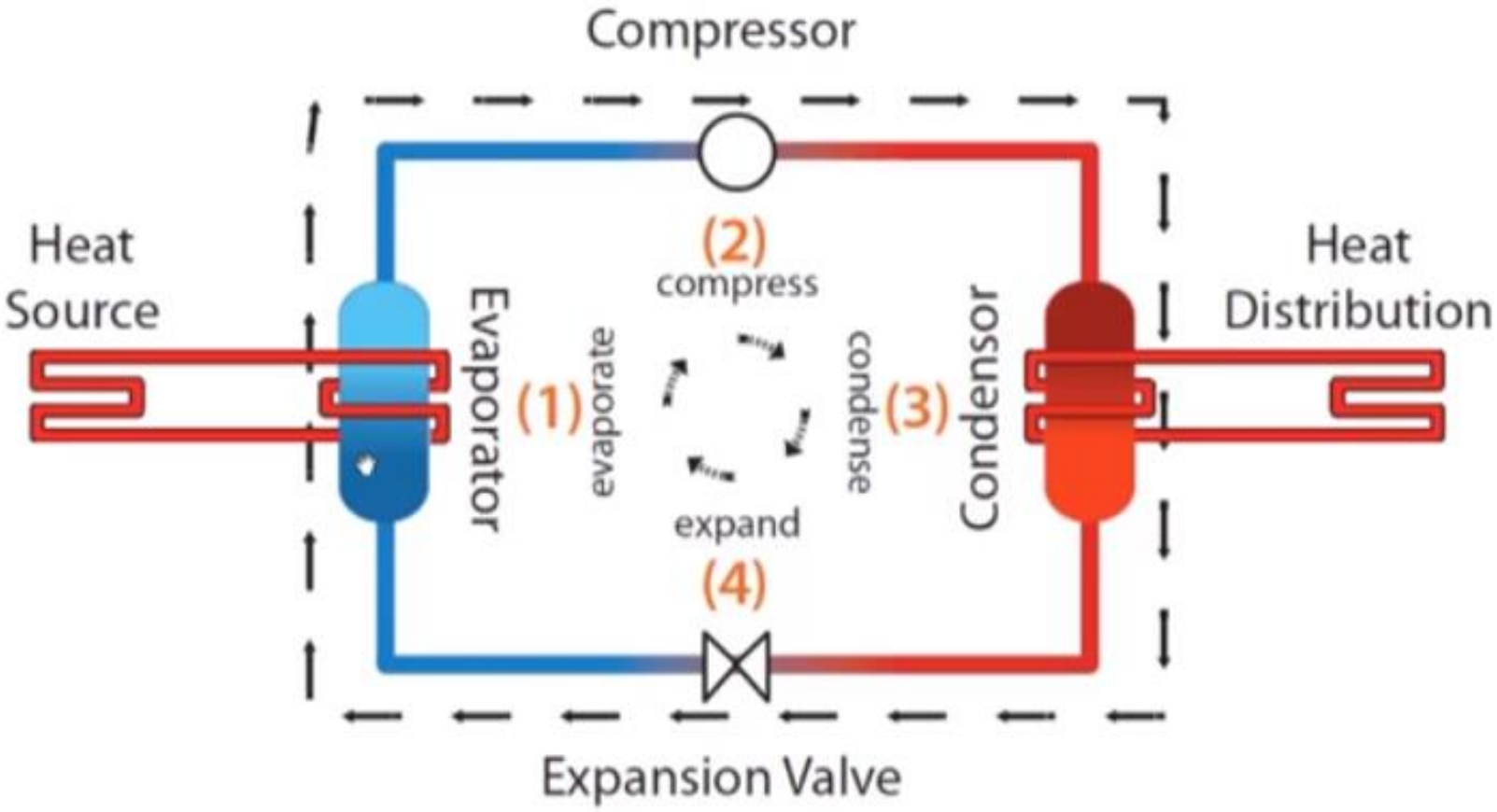

tekmar®

Reversible Heat Pump Cycle in Heating Mode

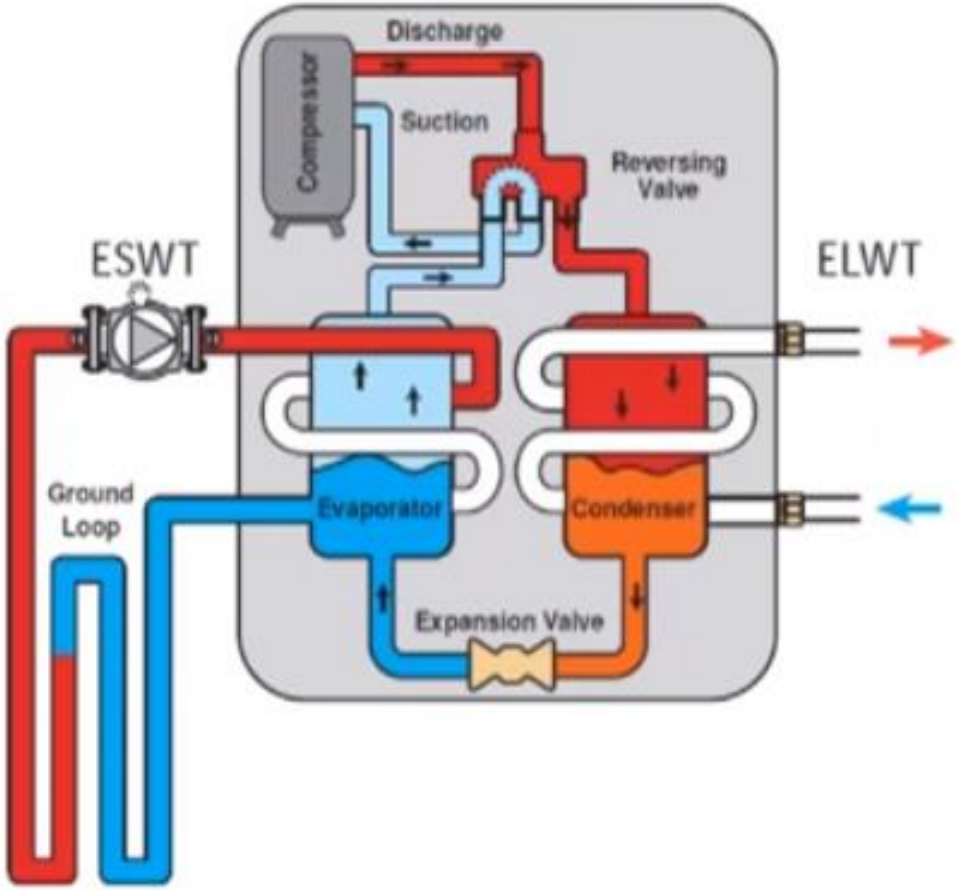

tekmar®

Reversible GSHP Valve

- Switches the heat pump from heating to cooling
- Activated by a 24 V signal (O/B)

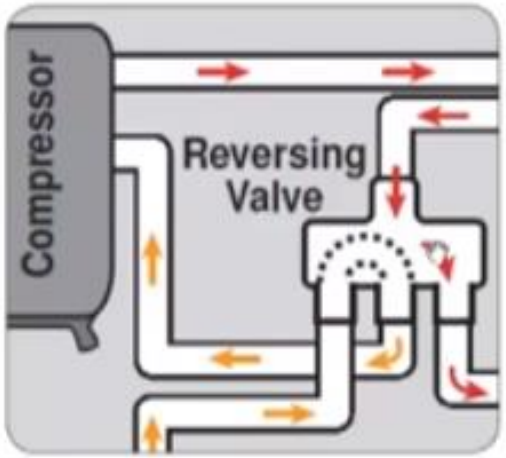

Heating mode

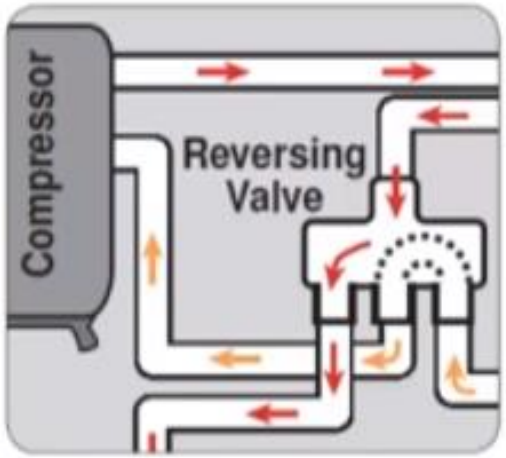

Cooling mode

tekmar®

Reversible Heat Pump Cycle in Cooling Mode

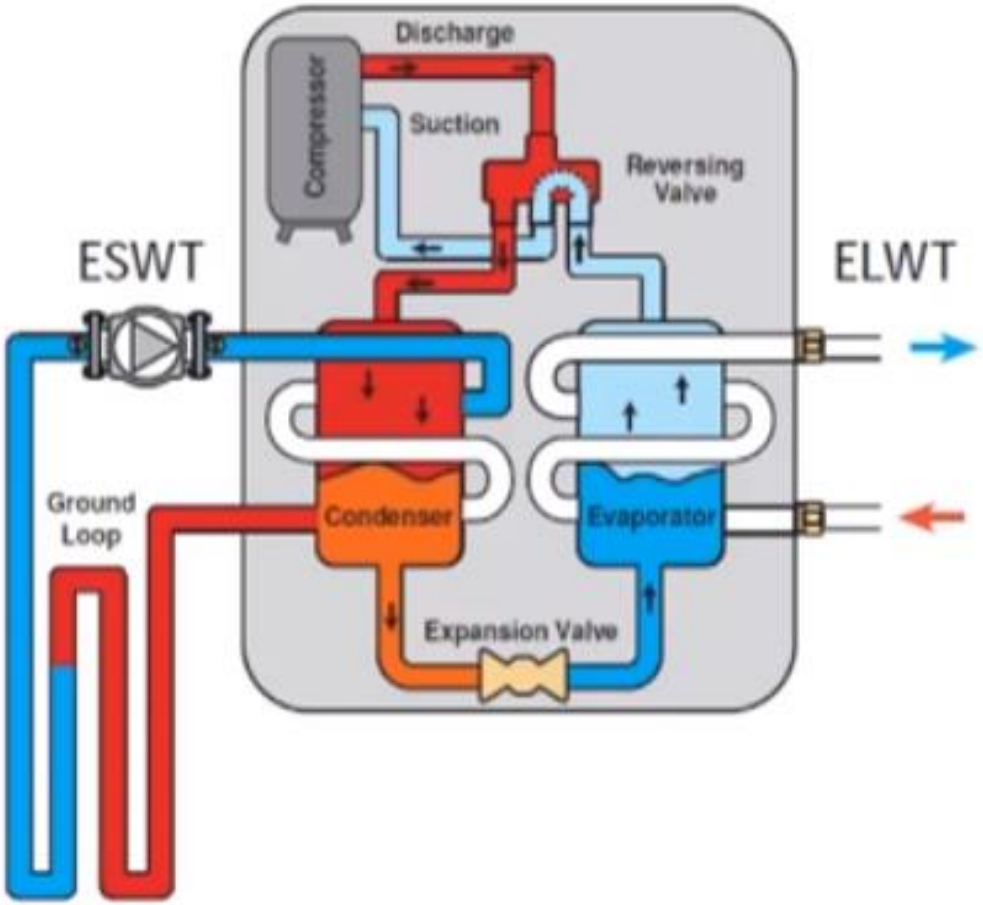

tekmar®

Calculating GSHP COP

Assume the input power to operate a heat pump is 2000 W, and the heat pump's heating capacity under certain conditions is 28,000 Btu/hr.

$$COP = \frac{\text{heating capacity (Btu/hr)}}{\text{input electricity (W)} \times 3.413}$$

$$= \frac{28{,}000 \text{ Btu/hr}}{2000 \text{ W} \times 3.413}$$

$$= 4.1$$

tekmar®

COP Increases as ESWT Increases & ELWT Decreases

A heat pump's COP increases as the entering source water temperature (ESWT) increases and the entering load temperature (ELWT) decreases

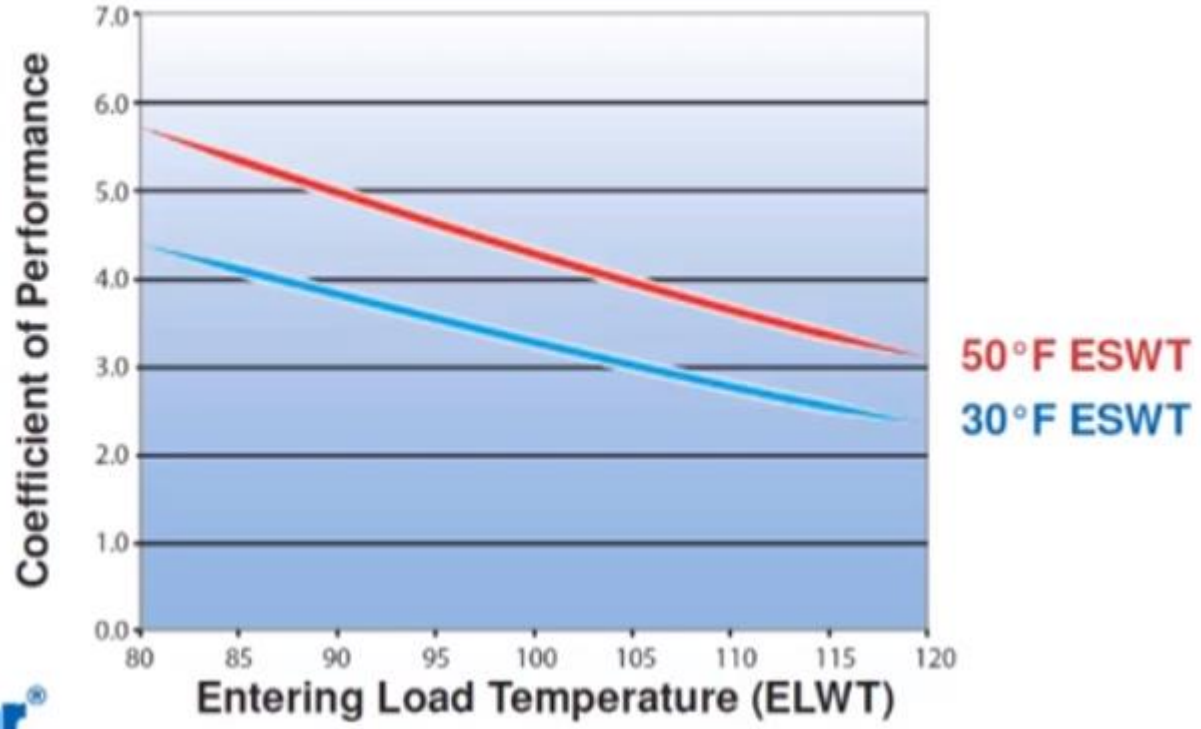

tekmar®

Maximizing GSHP COP

The goal is to minimize the difference between the entering source water temperatures (ESWT) and the entering load water temperatures (ELWT).

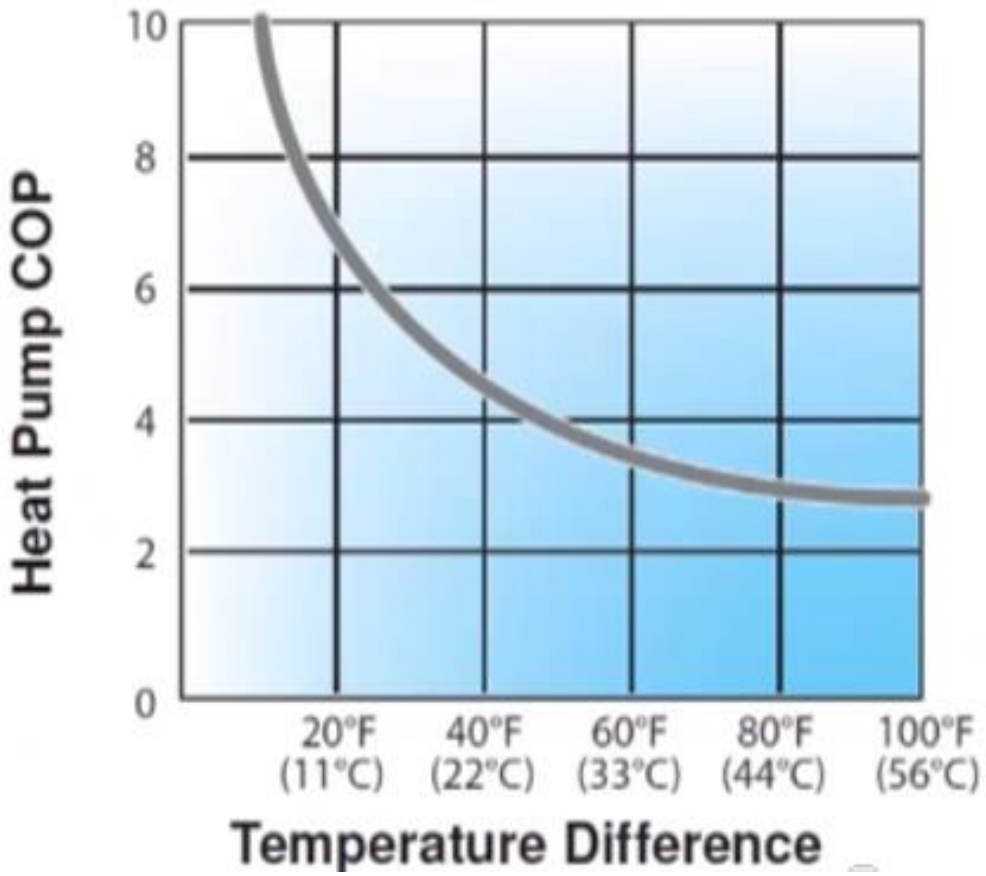

tekmar®

Solar Evacuated Tube Production

- In the sunny middle of the country, one Sq Ft of Solar Evacuated Tube Panels can produce an average 290,000 Btu’s per year at an initial panel cost of $38 per sqft.
- On a bright winter day they will produce an average of 1,400 Btu’s per sqft per day.
- For a peak heating load of 12,000 Btu/hr, ~70 sqft of solar evacutated tube panels would be required for a solar tracking system to meet only the heating requirements of the structure.
- For a passive installation, ~140 sqft of solar evacutated tube panels would be required plus additional sqft for DHW production.

Solar Thermal Parabolic Tracker

- In addition to tracking, parabolic concentrators can increase production for both solar thermal and PV panels by 50%.
- Development of a hybrid solar tracking system capable of providing both solar thermal and PV sources of renewable energy could provide a rapid ROI.
- Parabolic concentrators can also produce higher water temperatures approaching 250 °F.

Boosting COP for Integrated GSHP

- Integration of solar thermal with GSHP and Desuperheater systems could substantially increase the COP of the GSHP, or reduce operation of the GSHP through direct use solar thermal energy.
- The hot water of the thermal solar system and desuperheater systems could be used to offset cycling of the GSHP by reducing the temperature differential for the supply and load of the GSHP system.
- This integrated GSHP approach could be ideal for integration with relatively low temperature hydronic systems.

Solar Thermal in Temperate Climates

- In the sunny middle of the country, one Sq Ft of Solar Flat Panels can produce an average of 294,000 Btu’s per year at an initial panel cost of $32 per sqft.
- On a bright Fall or Spring day they will produce 1,418 Btu’s per sqft per day.
- If you are in an area where near or below freezing temps are normal for the heating months, then Solar Flat Panels will not produce enough energy to match the Evacuated tubes. Solar Evacuated Tubes would be the proper and efficient Solar Panels for that climate.

Flat Panels vs. Evacuated Tubes

- Flat Panels are more efficient in warmer climates than Evacuated Tube Panels, as Flat Panels are affected by outside air temp and cold wind.
- Evacuated Tube Panels are more efficient in warm to sub-freezing climates, as they are not affected by outside air temperature or cold wind, and absorb available sunlight from 360 degrees.

GSHP System Design

- Is comprised of:
  - Geosystem Design
  - Distribution System Design
- The objective in the heating mode is to keep the ELWT as low as possible
- The objective in the cooling mode is to keep the ELWT as low as possible
- *Vice Versa* for ESWT.

Calculating the Energy Efficiency Ratio (EER)

The performance of a heat pump in cooling season is referred to as EER (energy efficiency ratio).

Assume the heat pump's cooling capacity under certain conditions is 20,000 Btu/hr and the required input electricity is 1000 W.

$$EER = \frac{\text{cooling capacity (Btu/hr)}}{\text{input electricity (W)}}$$

$$= \frac{20{,}000 \text{ Btu/hr}}{1000 \text{ W}}$$

$$= 20$$

tekmar®

Determining Factors for EER

A heat pump's EER increases as the entering source water temperature (ESWT) decreases and the entering load water temperature (ELWT) increases.

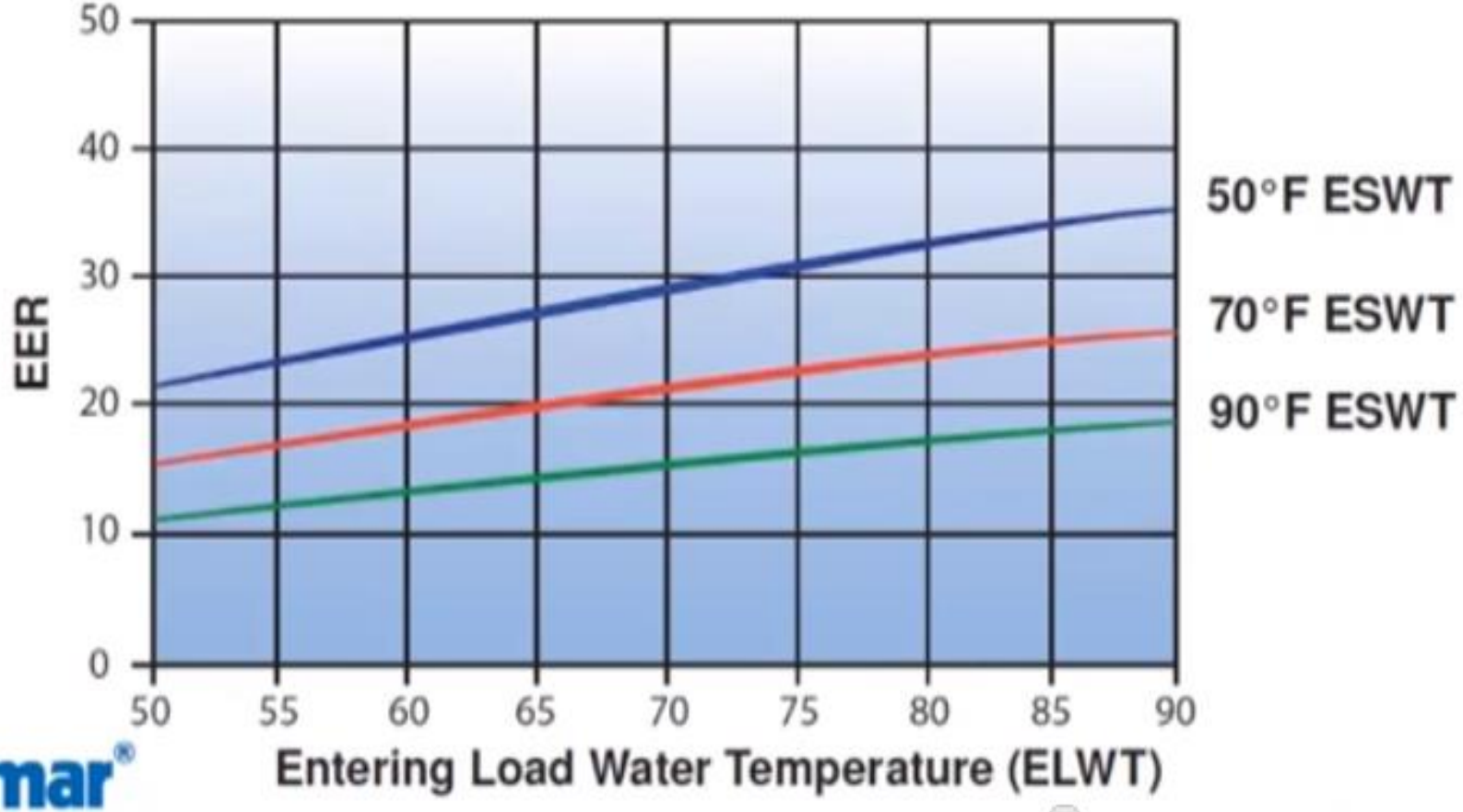

tekmar®

GSHP & Radiant Systems

- The relatively constant earth temperature (~55 °F) is ideal for integration of high efficient GSHPs and radiant distribution systems which utilize relatively low temperature heating and relatively high temperature cooling inputs.
- This design approach is particularly appealing when solar thermal and earth tubes are used as alternative sources of hot and cold water, bypassing the GSHP for radiant distribution systems during seasonal operation.

Low Temperature Radiant Heating Systems Reduce Problems

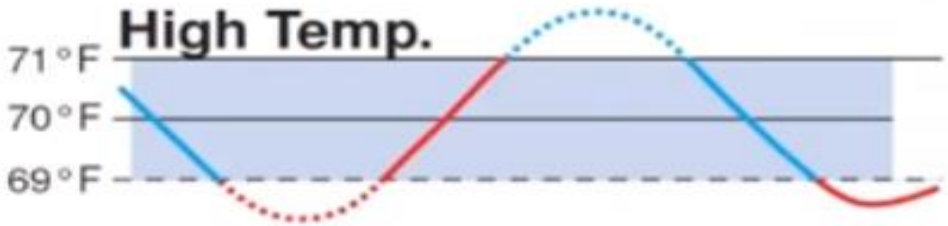

- High supply temperatures are what cause overshoots and undershoots

- Water temperatures need to be reduced for efficiency and comfort

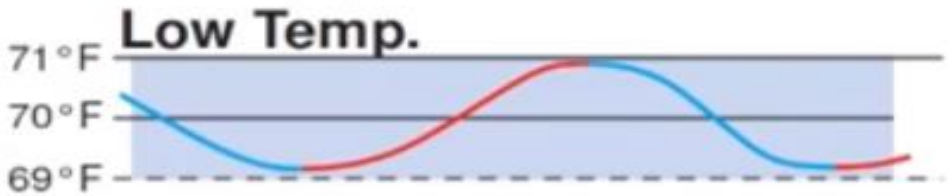

tekmar®

Geothermal Heat Pump Economics

- Even though the installation price of a geothermal system can be several times that of an air-source system of the same heating and cooling capacity, the industry ROI is currently less than 5 years.
- For energy efficient structures that reduce HVAC loads by up to 95%, and can bury the horizontal field loops around the footings of a structure, both purchase and installation costs are substantially reduced, providing a ROI in as little as three years.

Geothermal Heat Pump Economics for New Construction

- For new construction of passive house technology in which energy loads are reduced by 90%, HVAC tonnage can be reduced proportionately and field loops buried in the structure’s footings.
- This results in substantially reducing initial costs for installation of geothermal and radiant systems, allowing for an immediate net increase in cash flow for new mortgages.
- This allows for installation of solar PV power systems to achieve net-zero energy homes.

Geothermal Heat Pump System Life Cycle

- System life is estimated at 25 years for the inside components and 50+ years for the ground loop.
- There are approximately 50,000 geothermal heat pumps installed in the United States each year.

Advanced Heat Pump Features

- Variable speed compressors, blowers and water pumps
- Desuperheaters
- Scroll compressors (often used in air source mini-splitter technologies which are designed for use in isolated locations without requiring ducts, such as retrofitting existing HVAC systems during remodeling)
- Automated Controls

Variable Speed Capacity

- Some models of heat pumps are equipped with variable-speed fans (blowers), compressors and water pumps.
- The variable-speed controls for these heat pump components attempt to keep the air moving at a comfortable velocity, minimizing cool drafts and maximizing electrical savings.
- It also minimizes the noise from the blower running at full speed.

Desuperheater

- Many high-efficiency heat pumps are equipped with a *desuperheater*, which recovers waste heat from the heat pump's cooling mode and uses it to heat water.
- A desuperheater-equipped heat pump can heat water 2 to 3 times more efficiently than an ordinary electric water heater.

Scroll Compressors

- Consists of two spiral-shaped scrolls. One remains stationary, while the other orbits around it, compressing the refrigerant by forcing it into increasingly smaller areas.
- Compared to the typical piston compressors, scroll compressors have a longer operating life and are quieter.
- According to some reports, heat pumps with scroll compressors provide 10° to 15°F (5.6° to 8.3°C) warmer air when in the heating mode, compared to existing heat pumps with piston compressors.

Air Source Heat Pumps

- Air source heat pumps have limitations in cold environments (they cannot deliver warm air after the outside temperature drops below freezing).
- When outdoor temperatures fall below 40°F, a less-efficient panel of electric resistance coils, similar to those in your toaster, kicks in to provide indoor heating.
- This is why air-source heat pumps aren't always very efficient for heating in areas with cold winters.
- Some units now have gas-fired backup furnaces instead of electric resistance coils, allowing them to operate more efficiently.

Dual-Source Heat Pumps

- A dual-source heat pump combines an air-source heat pump with a geothermal heat pump.
- These appliances combine the best of both systems.
- Dual-source heat pumps have higher efficiency ratings than air-source units, but are not as efficient as geothermal units.
- The main advantage of dual-source systems is that they cost much less to install than a single geothermal unit, and work almost as well.

Ground/Water Source Heat Pumps

- Geothermal heat pumps (GHPs), sometimes referred to as geoexchange, earth-coupled, ground-source, or water-source heat pumps, have been in use since the late 1940s.
- They use the constant temperature of the earth as the exchange medium instead of the outside air temperature.
- This allows the system to reach fairly high efficiencies (300% to 600%) on the coldest winter nights, compared to 175% to 250% for air-source heat pumps on cool days.

Ground/Water Source Heat Pumps cont.

- Although many parts of the country experience seasonal temperature extremes -- from scorching heat in the summer to sub-zero cold in the winter—a few feet below the earth's surface the ground remains at a relatively constant temperature.
- Depending on latitude, ground temperatures range from 45°F (7°C) to 75°F (21°C). Like a cave, this ground temperature is warmer than the air above it during the winter and cooler than the air in the summer. The GHP takes advantage of this by exchanging heat with the earth through a ground heat exchanger.

Heating, Cooling & Hot Water

- As with any heat pump, geothermal and water-source heat pumps are able to heat, cool, and, if so equipped, supply the house with hot water.
- Relative to air-source heat pumps, they are quieter, last longer, need little maintenance, and do not depend on the temperature of the outside air.

Closed Loop Geothermal Heat Pump

- For the PHMH, ground coils for the geothermal heat pump will be shared with the ERVs.
- Coils will be placed around the footings of the PHMH.
- Since the energy load of the super-insulated PHMH will be reduced by 90%, the heating and cooling requirements will be reduced proportionately as will the field loop requirements.
- This will substantially reduce costs for installing efficient variable capacity ground-source heat pumps.

Earth-Coupled Heat Pumps

- Heating, cooling and hot water can account for as much as 75% of the total energy cost in a typical home or commercial building.
- Capacity-on-demand heat pumps are the most cost effective solution to all three energy sources.

Variable Speed System Control

- The variable capacity system control consists of developing an automated operating system (software) integrated with a control board (hardware) that replaces the current three phase operating systems.
- This automated system will provide seamless variable speed control for secondary circuits including the compressor, fan/blower, and possibly the water pump.

Revolutionary Heat Pump Efficiency

- Variable capacity heat pumps automatically match the energy draw with energy demand in real time, optimizing energy efficiency unlike any other HVAC system available today.
- With ECM motors and options for multiple compressors or a 100% variable speed compressor, they consume energy at a level comparable to the production of your system… every minute of every day.
- In a compelling side-by-side comparative analysis at Langley Air Force Base, the capacity-on-demand system used significantly less power (an average of 51% less power) than a leading national brand to condition the same space. The test was conducted during July 2011 at Langley Air Force Base, Hampton, Virginia.

Geothermal Heat Pump Energy Tax Credit through 2016

- Taxpayers installing systems for their residence are eligible for the Residential Renewable Energy Tax Credit, a tax credit equal to 30% of the geothermal system including installation costs.
- Taxpayers installing systems on commercial property are eligible for the Business Energy Investment Tax Credit (ITC), and tax credit equal to 10% of the geothermal system including installation costs.
- There is no cap on either of the federal tax credits and the 2016 time frame may be extended.

Integrated Solar & ERV-GSHP System

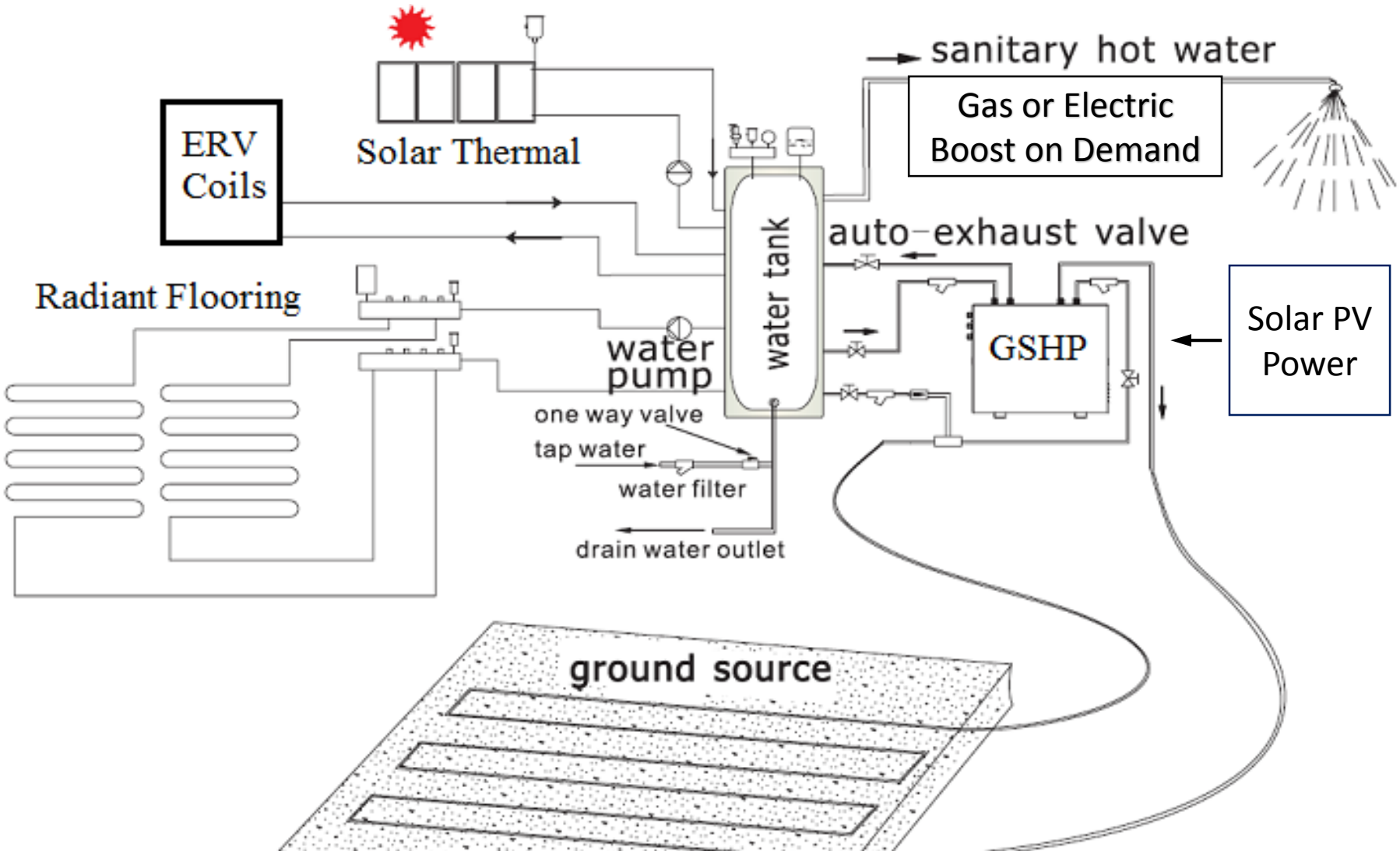

Proper Design & Performance

- Without proper design, the GSHP system including heat exchanger field loops and load distribution will not function properly and thus will fail to perform as expected.
- Including integration of solar thermal and slinky field loops as sources of hot and cold water for passive heating and cooling is essential to reduce installation and operation costs for the integrated radiant and forced air HVAC system.

Integrated GSHP System Design

- Is comprised of the following, each of which must be properly sized and designed for proper functioning:
  - Solar Thermal, Ground Heat Exchangers (e.g., slinky field loops for heating and earth tubes with ability to bypass GSHP for cooling)
  - GSHP System including Desuperheater and bypass for slinky field loop/earth cooling system
  - Distribution system including low heat temperature and high cooling temperature radiant floor system combined with forced air ERV coils.

Components of a GSHP System

- Components of a ground source heat pump system
- Geothermal system design
  - Loop
  - Heat pump
  - Buffer tank
- Control & distribution design
  - Distribution system options
  - Outdoor temperature reset
  - Indoor temperature feedback
  - Zone synchronization

tekmar®

Primary Components of a GSHP System

tekmar®

Efficiency & Reliability of the GSHP System

The efficiency and reliability of the geothermal heat pump system depends upon how well the various components work together.

- Sizing & design of the ground heat exchanger
- Sizing of the heat pump
- Selection and sizing of distribution system
- System control

tekmar®

GSHP System Sizing

- Begins with determining accurate peak heating and cooling loads of the structure through detailed modeling and simulation software (NREL BEopt & EnergyPlus).
- Realizing that the peak heating and cooling loads will only be required 1-2% of the year, the system can be designed with 100% capacity to enhance COP and EER ratings.
- If solar thermal and slinky earth tubes are utilized for radiant floor systems, the GSHP will seldom if ever operate at peak heating capacity.
- For Boise, ID, the predominant mode of operation for the GSHP system design is the heating mode.

Ground Source Design

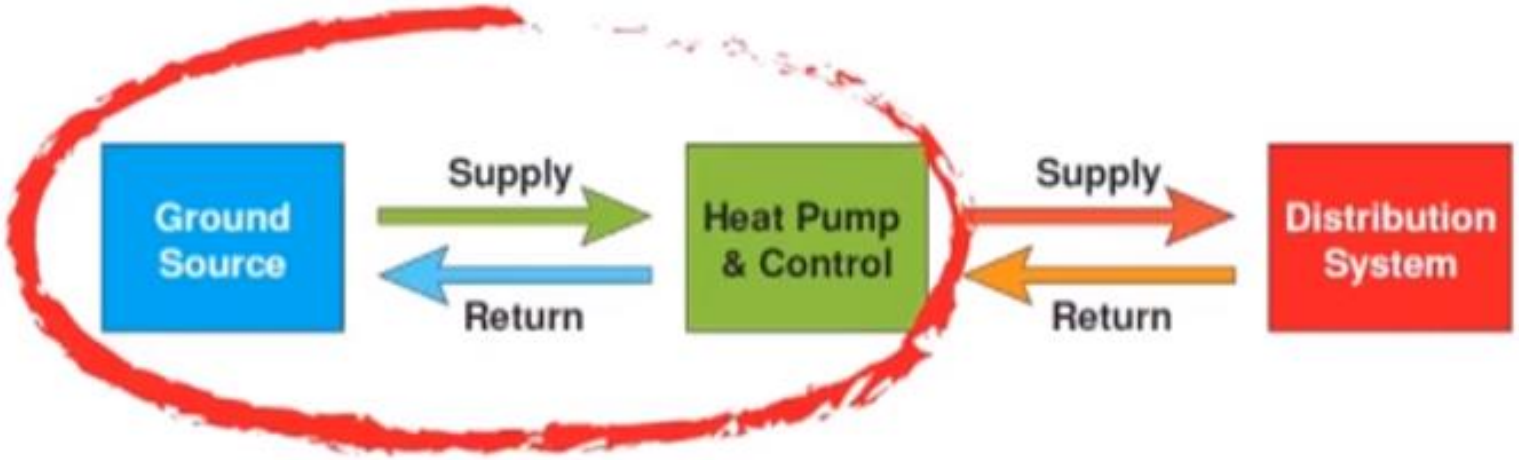

tekmar®

Slinky Field Loops

- Primary objective is to insure constant ground source temperature through:
  - Sufficient soil depth (preferably 8 ft. or deeper)
  - Properly prepared trench and soil bed for slinky field loops
  - Proper heat joints of tubing and careful back-fill without damaging
  - Method of keeping sufficiently hydrated field loops to insure optimal functioning and performance

Buffer Tank

- Since the demands for radiant heating and cooling can periodically exceed the capacity of the GSHP during heating and cooling cycles, a buffer tank or two must be included in the system design.
- Thermal solar and slinky field loops can also contribute to these buffer tanks. In temperate climates, only a buffer tank for hot water may be required.
- Proper buffer tank sizing is critical to avoid continuous on-off short cycling of the GSHP, avoid refrigeration circuit problems (the heat pump typically operates at a faster rate than load requirements), and provide hydraulic separation between the GSHP and load.

Buffer Tank Sizing

The size of the buffer tank should be determined based on the predominant use of the heat pump (heating or cooling).

- Virtually all water-to-water applications need a buffer tank between the heat pump and the hydronic load.

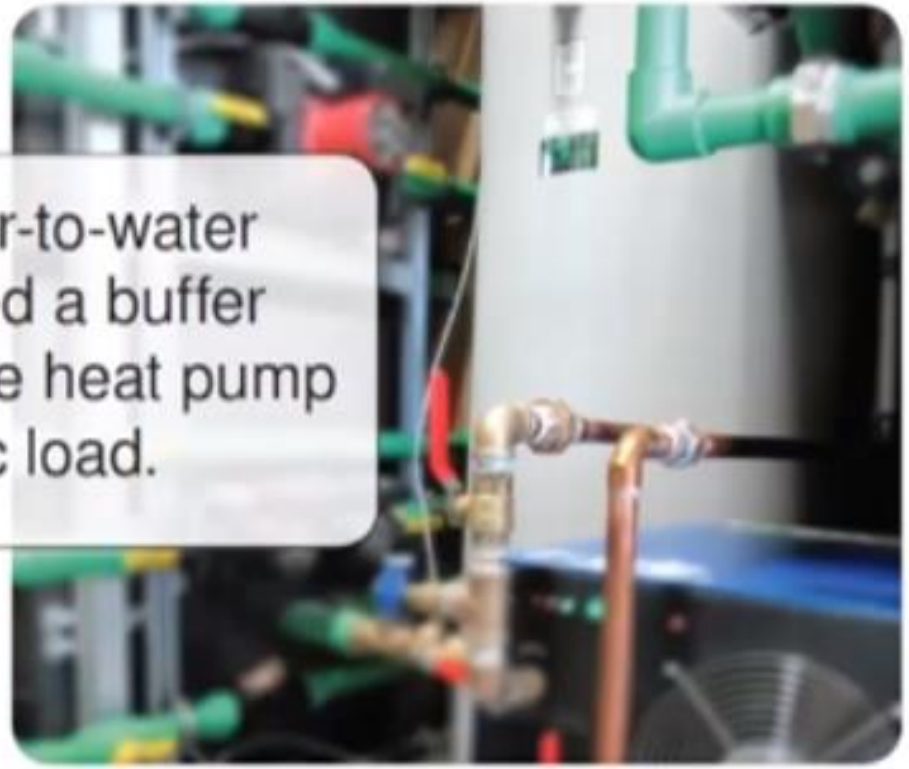

tekmar®

Calculating Buffer Tank Size

$$V = \frac{t\,(Q_{heat\ source} - q_{load})}{\Delta T \times 500}$$

Where:

V = Volume of the buffer tank

t = Duration of the heat source "on cycle"

$Q_{heat\ source}$ = Heat output rate of the heat source

q_{load} = Minimum rate of heat extraction from the tank

ΔT = Temperature rise of the tank

tekmar®

Buffer Tank Sizing Formula

$$V = \frac{t\,(Q_{heat\ source} - q_{load})}{\Delta T\ x\ 500}$$

V = Volume of the buffer tank (gallons)

t = Duration of the heat source on cycle (typically 5-10 minute cycles for a GSHP)

Q = Minimum rate of heat input (units of Btu/hr)

q = Minimum system load (units of Btu/hr)

ΔT = Temperature rise of the buffer tank (from when the heat source is turned on to when it is turned off)

Distribution System Design

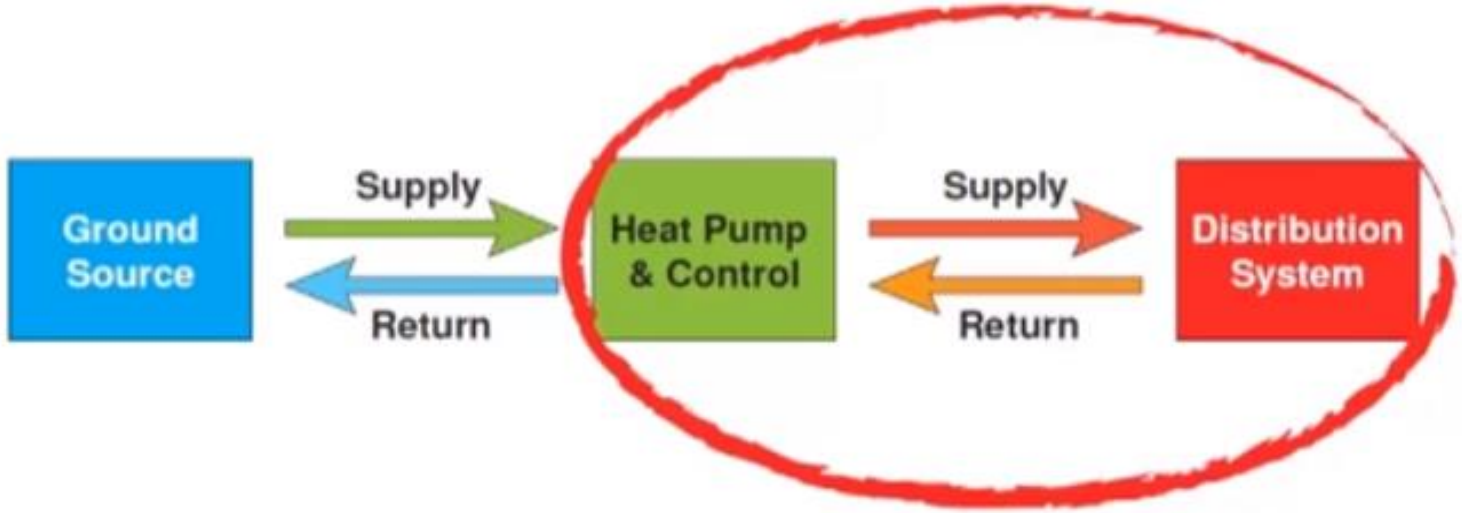

tekmar®

Distribution System Design cont.

ANYTHING we can do to reduce the water temperature in the distribution system increases the capacity and efficiency of the heat pump.

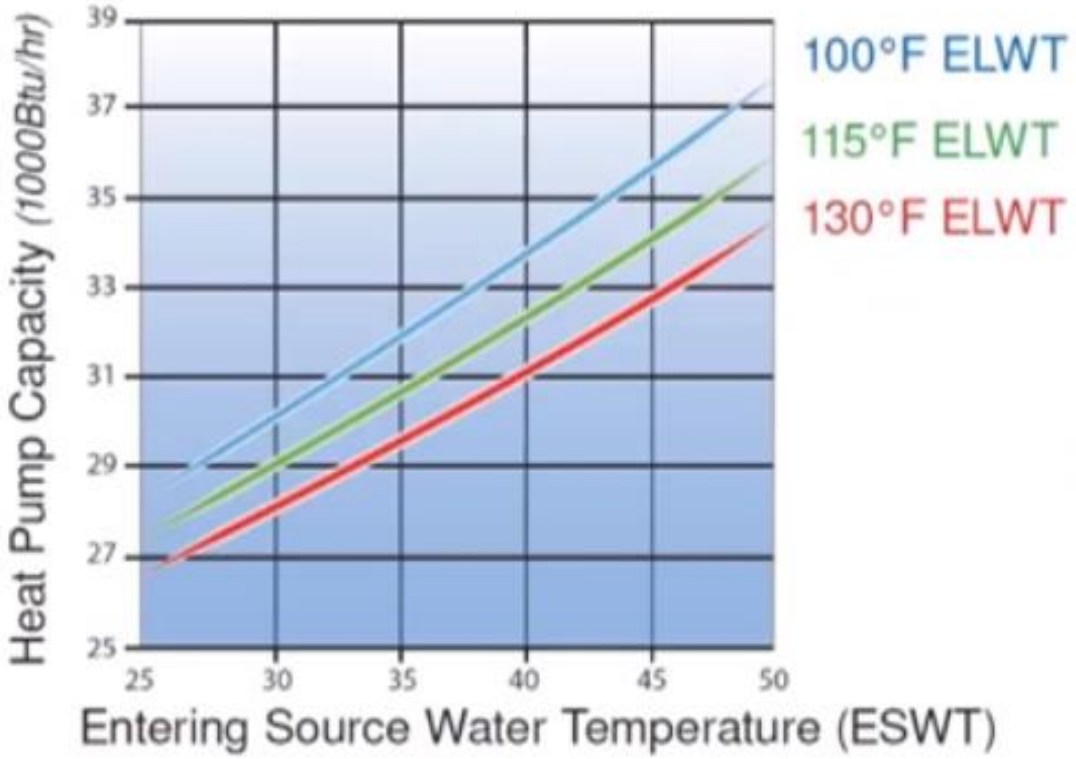

tekmar®

ICF/Concrete High Mass Structures Ideal for GSHP Radiant Systems

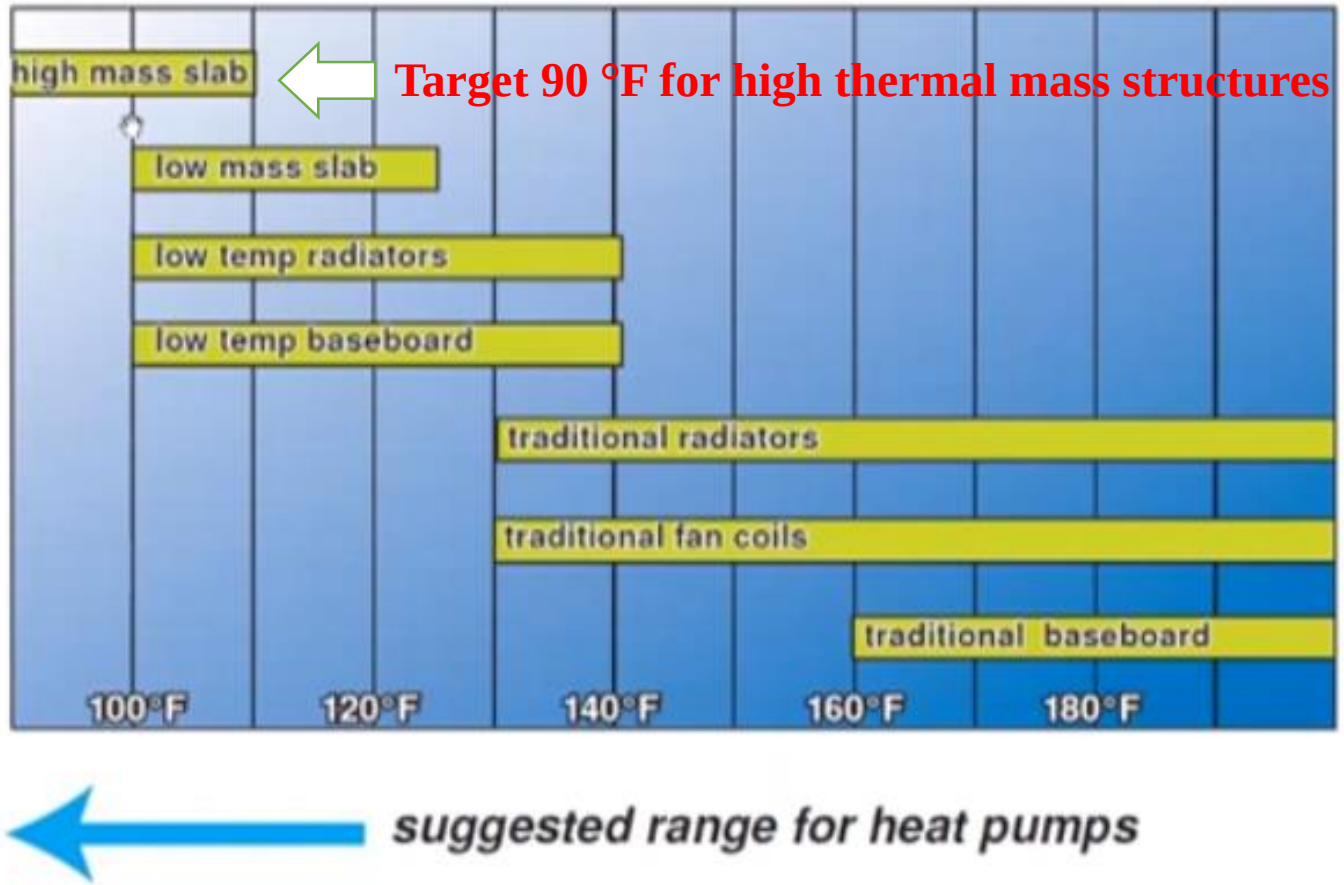

tekmar®

Integrated Radiant & Forced Air Delivery System for ERV-GSHP

- The key to an integrated radiant-forced air delivery system will be targeting the lowest temperature possible for adequate forced air tempering in conjunction with the radiant floor heating system.
- This will allow us to use the same GSHP and buffer tank for the radiant and forced air heating and cooling systems while optimizing COP for the GSHP.

Integrated ERV-GSHP Radiant-Forced Air System

- Tekmar Controls have designed thermostats that can regulate both radiant floor heating and cooling systems in addition to forced air systems (such as using coils inserted into an integrated ERV-GSHP).
- The forced air tempering system supplements the radiant system and uses the same buffering tank and water temperatures used by the radiant floor system.

Tekmar 406 House Control

Legend

P1	Variable Speed Pump
P2	HP Loop Pump
P3	Boiler System Pump
P4	Tank System Pump
P5	Mix System Pump
P6	DHW Pump
P7	Transfer Pump
S1	Outdoor Sensor
S2	HP Return Sensor
S3	Boiler Sensor
S4	Tank Sensor

S5	Mix Sensor
A1	DHW Aquastat

Application Settings

WATER TEMP	T+MB (tank + mix + boiler)
ZONES 1-4	MIX
BACKUP	XFER (transfer pump)
BOIL TYPE	0-10
HP LOOP	INT
HP TYPE	ROT (rotate)
DHW MODE	4

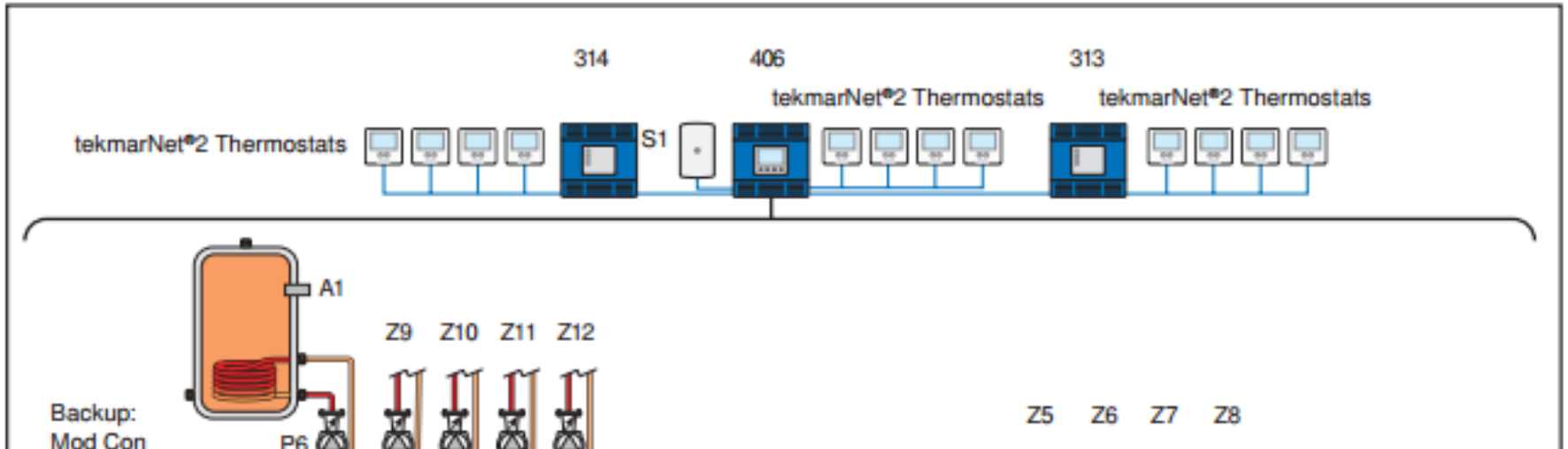

Solar Thermal Control

- A separate tekmar “Difference Setpoint Control 156”, which is compatible with the HC-406, will be utilized for the solar thermal system that will deliver hot water to the buffering tank of the GSHP system.
- The Difference Setpoint Control 156 is designed to transfer heat from an intermittent heat source to a storage tank. This control can be used in applications ranging from solar thermal to wood boiler systems. Two sensors are used to measure the temperature at the source and at the storage location, and begin heat transfer when there is a positive difference between them. This product uses a single 240 V (ac) rated relay to accomplish this.
- A separate hot water tank and on-demand backup gas or electric heater could be utilized.
- Depending on the size of the structure and peak heating load, for a passive house design, only one GSHP may be utilized.

Maximizing System Efficiency

Efficiency is maximized when we operate the heat distribution system at the lowest temperature.

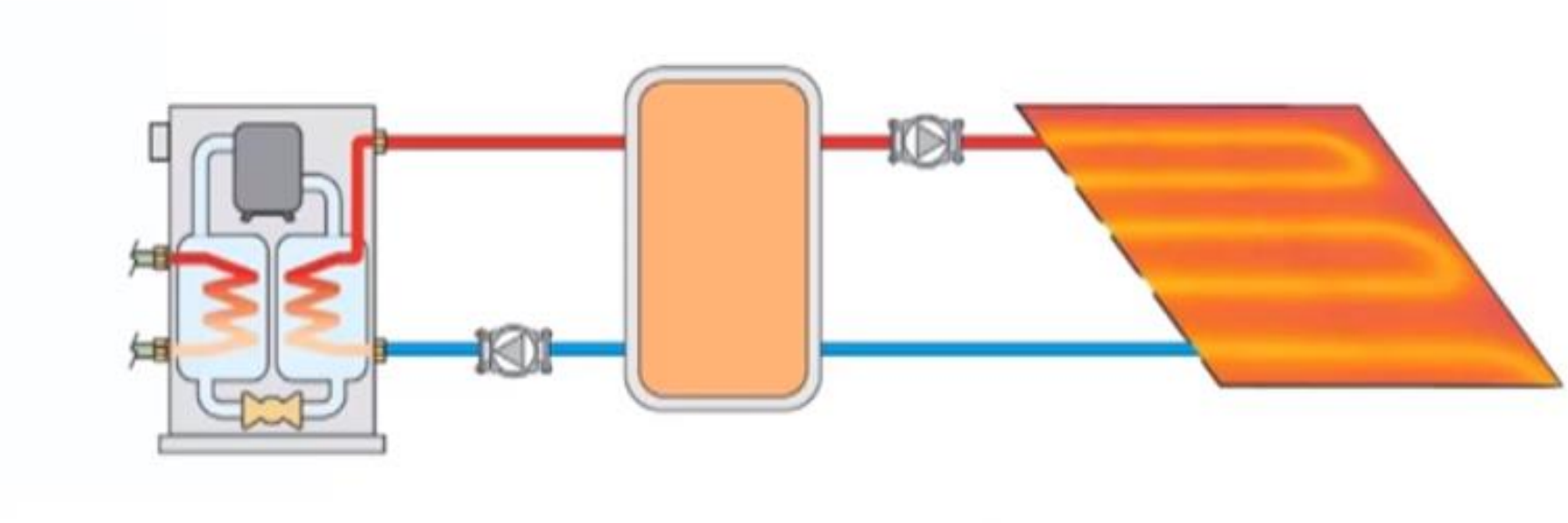

tekmar®

Buffer Tank Temperature Control Features

- The supply water temperature of the buffer tank distribution system can be minimized using the following control tekmar features while actually increasing occupant comfort:
  - Outdoor temperature reset (25% reduction in energy consumption)
  - Indoor temperature feedback (additional 10% reduction in energy consumption)

GSHP System Efficiency via Lower Supply Water Temperatures

System efficiency is improved through lower supply water temperatures.

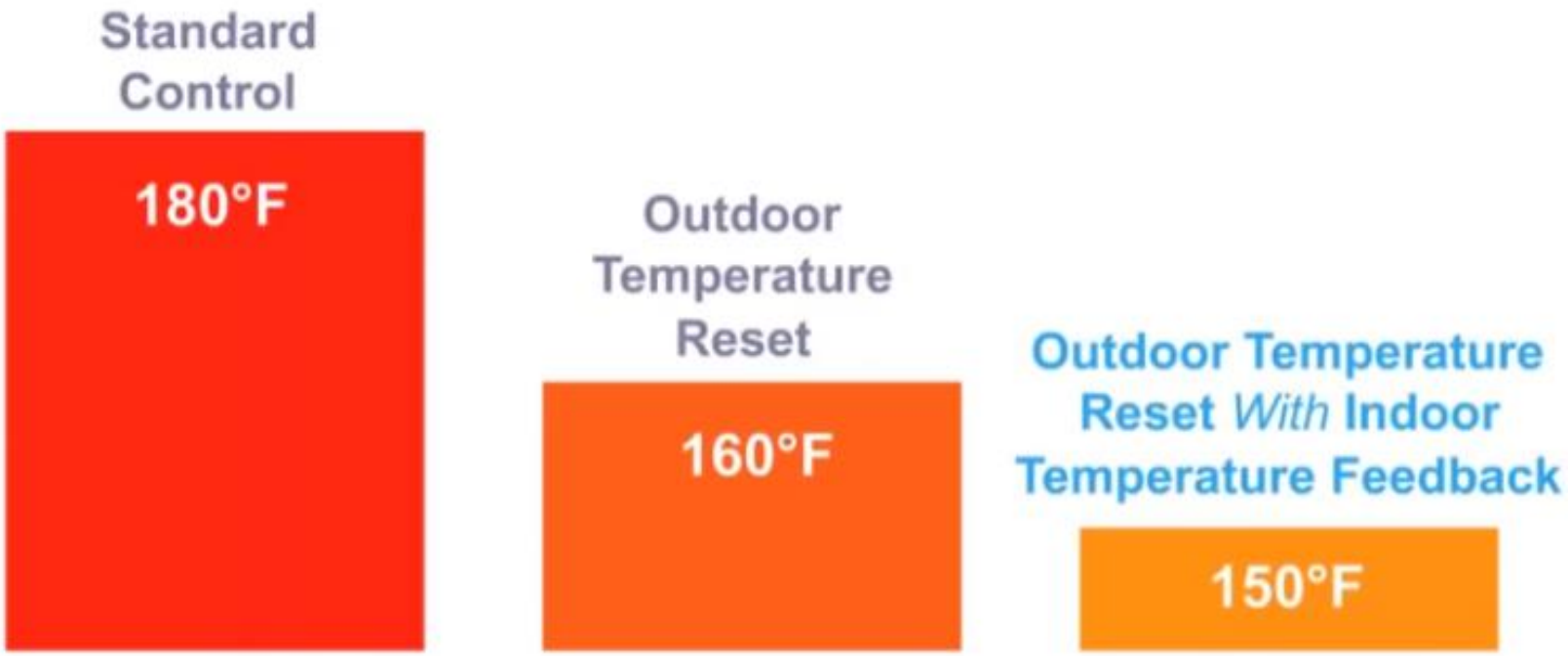

Buffer Tank Exceptions

- There are two primary conditions in which a buffer tank may not be required (but in which hydraulic separation will still be included in design):
  - For very energy efficient homes that have tight envelopes, are super-insulated, and have open floor plan designs where the minimum temperature of the zones are closely matched with the minimum temperature of the GSHP
  - For GSHP with variable compressors (new state-of-the-art GSHPs may have 100% variable compressors, fan motors, and water pumps)

Outdoor Temperature Reset

- The outdoor temperature reset regulates the supply water temperature according to demand in order to maintain indoor temperature and occupant comfort, e.g., there are obviously different load requirements for warmer days than for cooler evenings.
- Tekmar controls allow for regulating the buffer tank temperature so that concerns for overshooting and undershooting are eliminated.

Outdoor Temperature Reset cont.

The entering load temperature is calculated according to the current outdoor temperature.

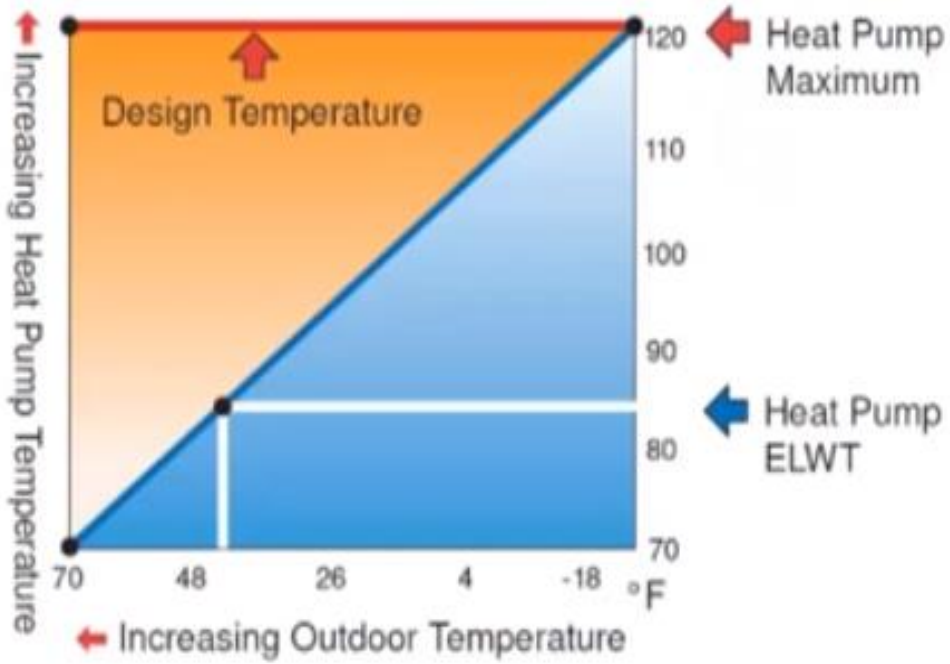

tekmar®

Outdoor Temperature Reset cont.

- As illustrated in the above graph, the tekmar outdoor temperature sensor and reset features allow for estimating the change in supply water temperature and continually regulates the temperature of the buffer tank to accommodate changes in outdoor temperatures and the effect that it has on the operation of the HVAC system.
- By matching the structure’s heat loss with the temperature of the distribution supply water, this results in significant increases in comfort while simultaneously reducing energy consumption.

Cold Days – Higher Buffer Temp.

On colder days, the target temperature is higher.

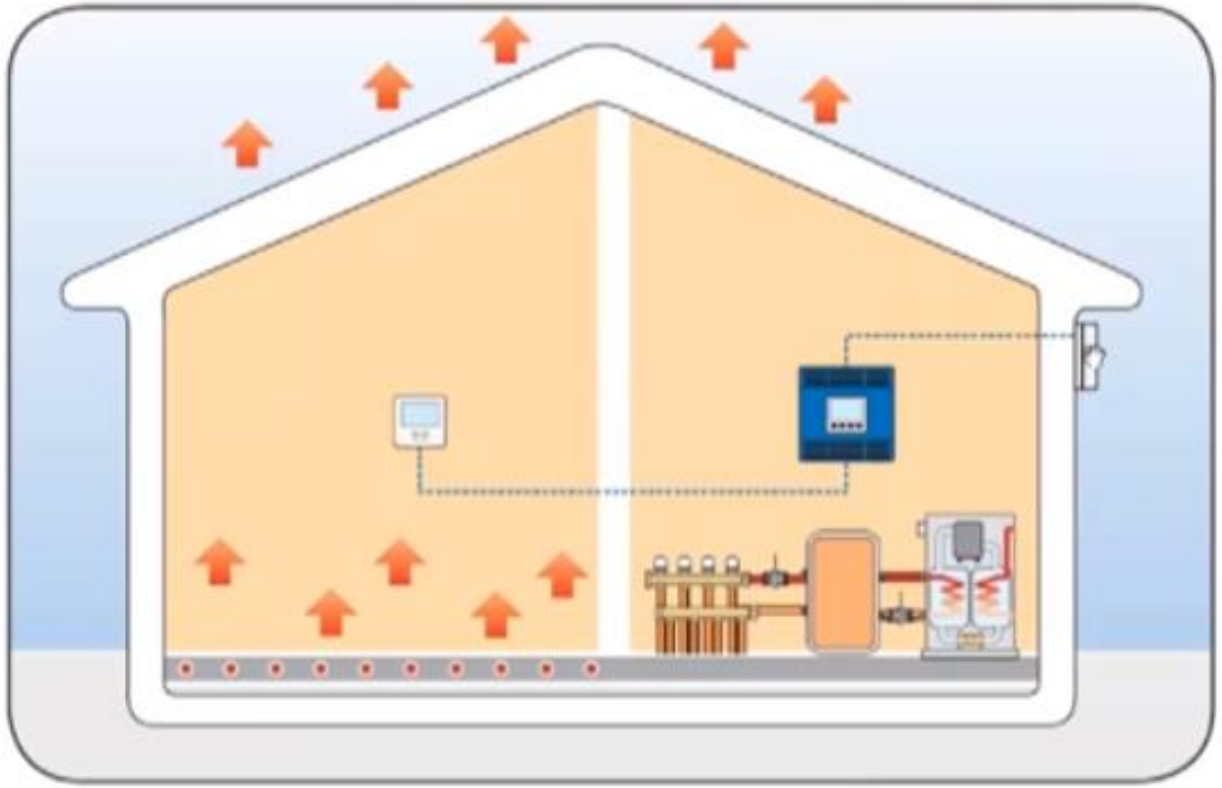

tekmar®

Warm Days – Lower Buffer Temp.

On warmer days, the target temperature is lower.

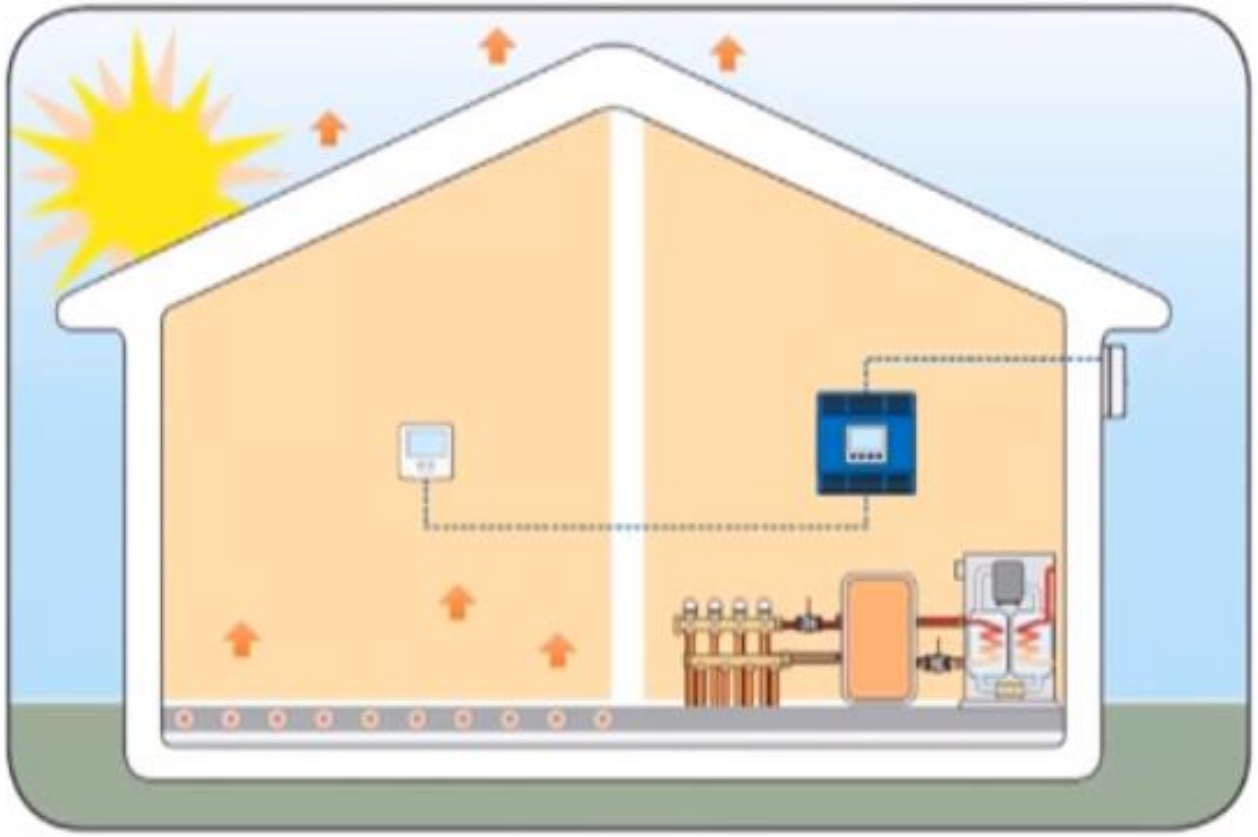

tekmar®

Resulting Energy Savings

Energy is saved every time the target temperature is below the design temperature.

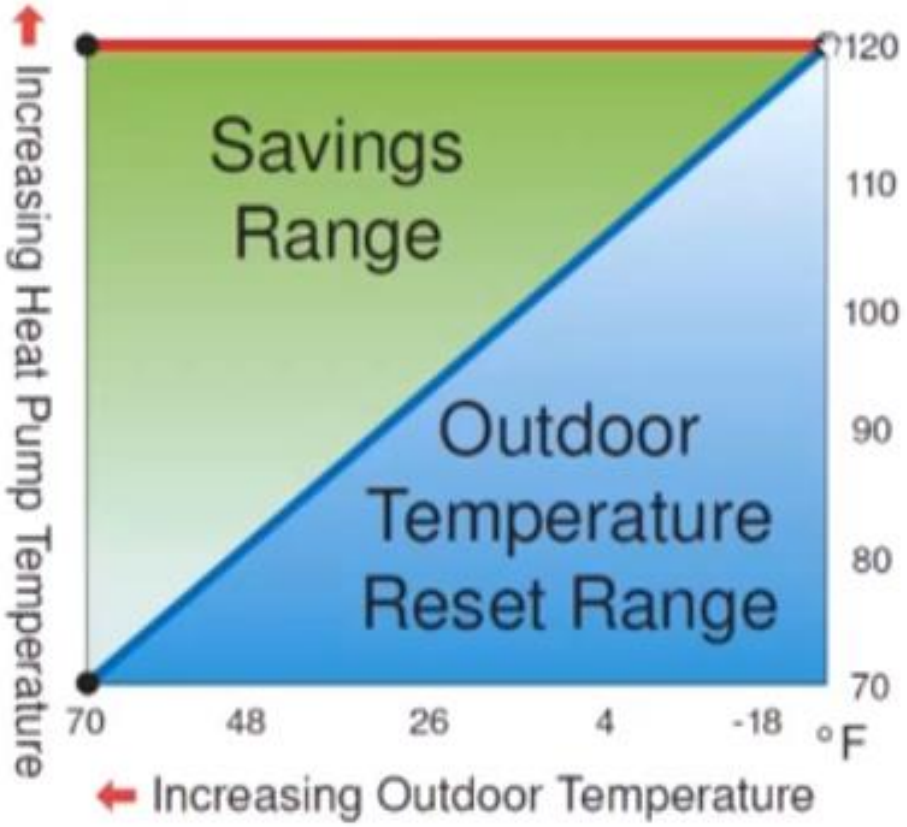

tekmar®

Communication Control Features

Communicating controls allow us to assess the *actual* needs of each individual zone and coordinate the functions within the overall system.

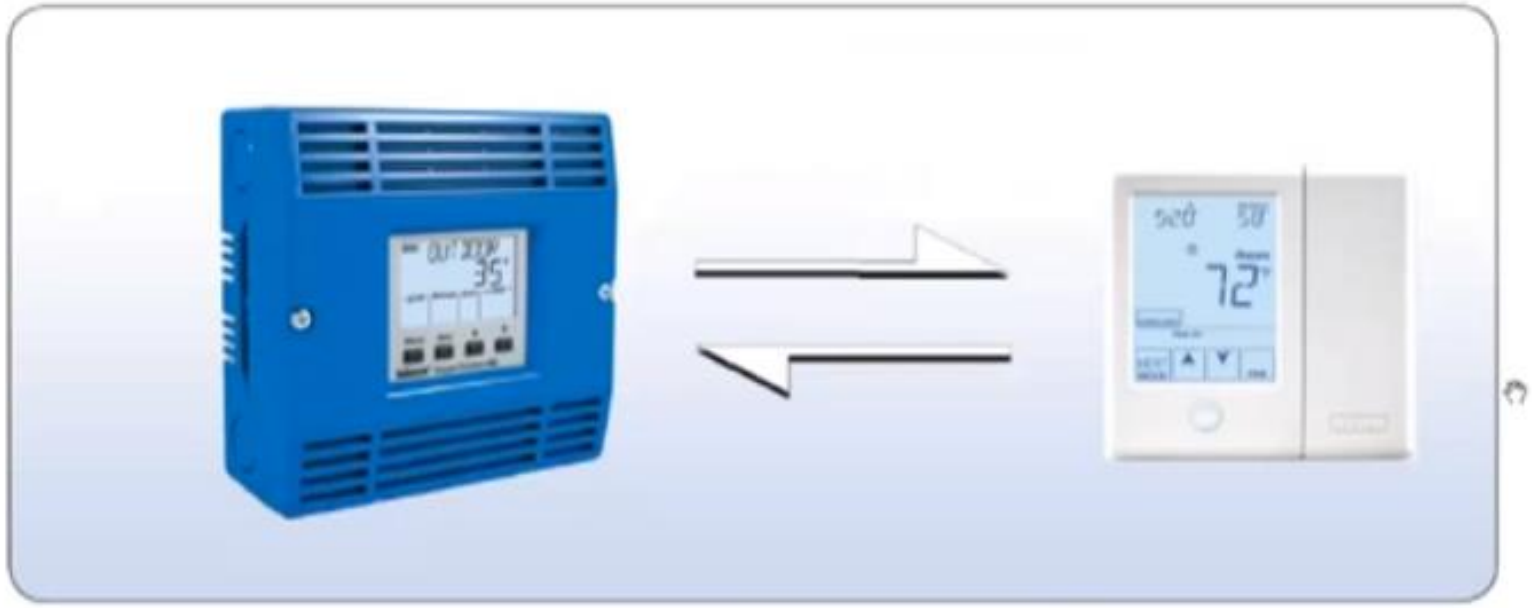

tekmar®

Indoor Temperature Feedback

- The Indoor Temperature Feedback feature complements the Outdoor Temperature Reset by modifying the function of the GSHP and buffer tank system to reduce unnecessary energy consumption for rooms or zones of a structure that may be impacted differently.
- An example is solar radiation on the south and west sides of a structure.

Solar Radiation Gain & Indoor Temperature Feedback

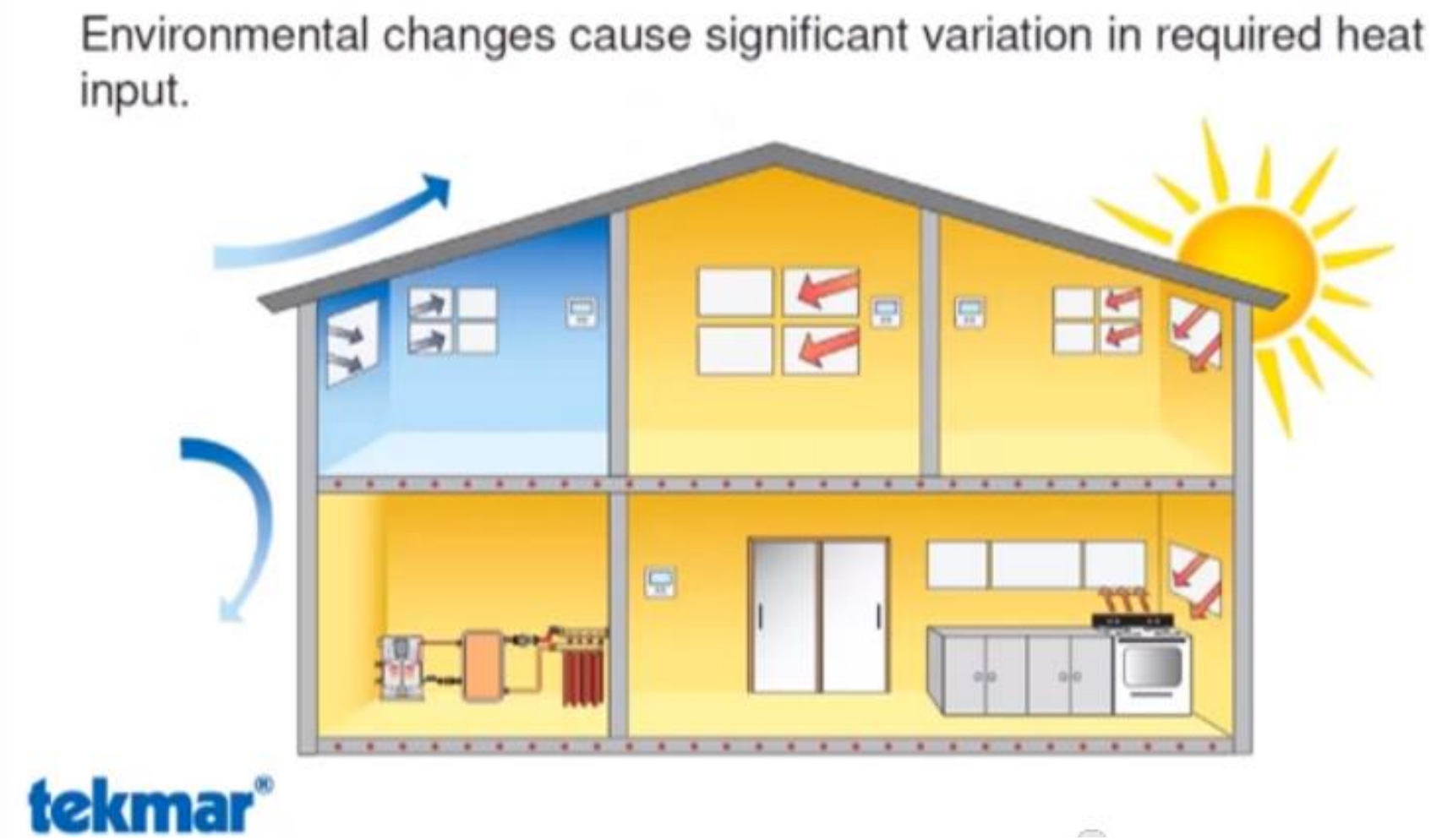

Indoor Temperature Feedback Zoning

- Using Indoor Temperature Feedback can allow for zoning areas of a structure to reduce energy consumption for a portion of the structure.
- In conjunction with the Outdoor Temperature Reset feature, this results in further reducing energy consumption by the GSHP and buffer tank system.

Reducing Energy Consumption

Energy is wasted by running the equipment at higher temperatures when additional output is not needed.

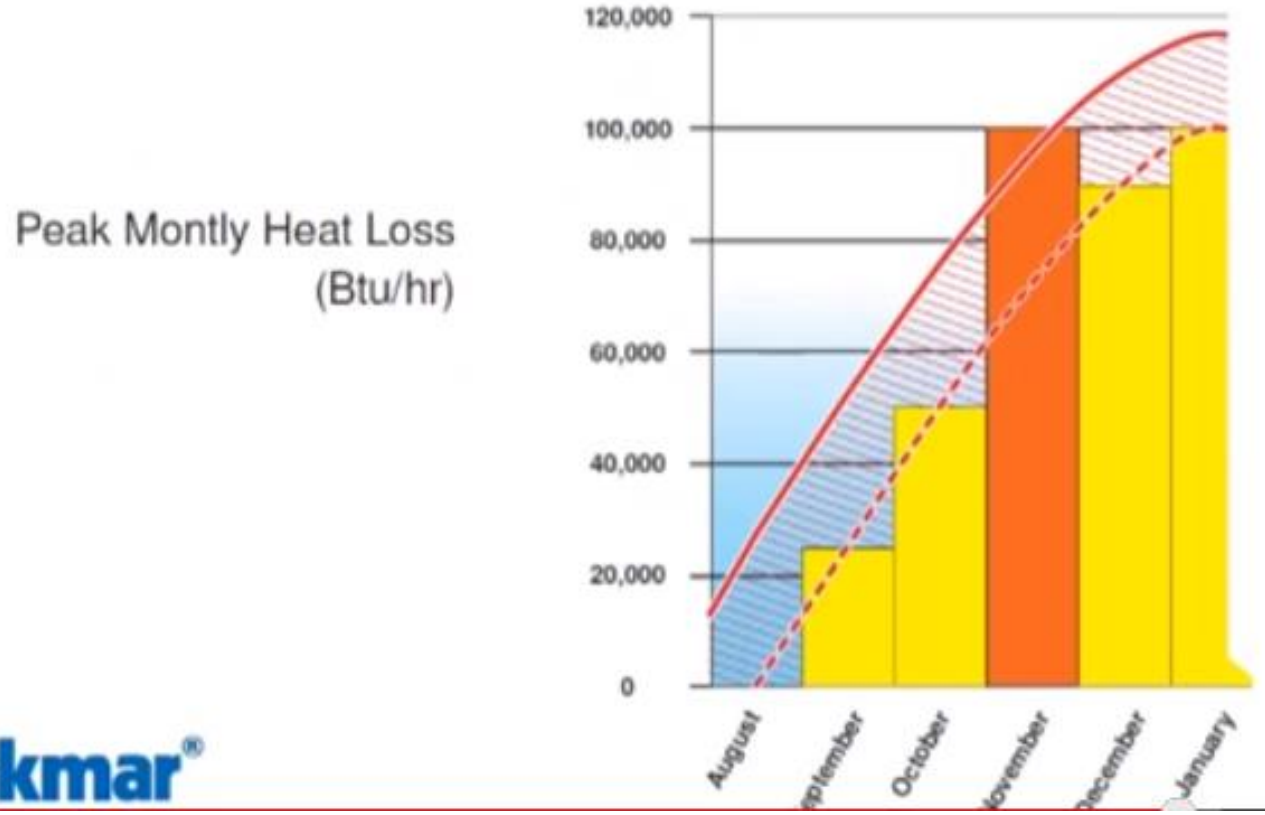

tekmar®

Improving Energy Efficiency via Zoning

- Operating the GSHP and buffer tank at higher than necessary temperatures comprises the COP rating and performance of the GSHP system.
- This results in reducing energy efficiency and wasting energy in those areas of the structure that are disproportionately affected by environmental conditions.

40% Increase in Energy Efficiency

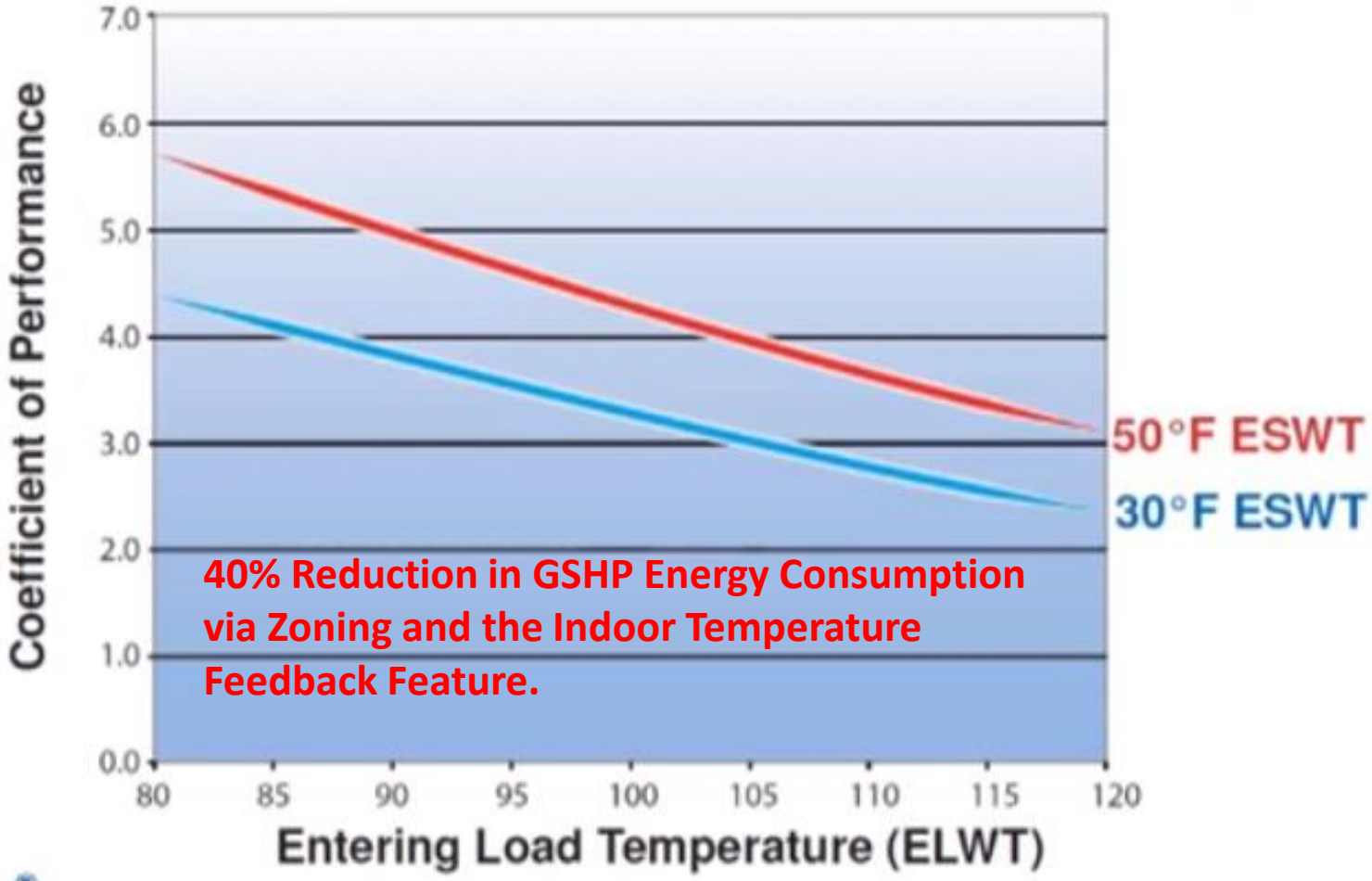

tekmar®

The Flywheel Effect

- The Indoor Temperature Feedback info is used to shift the outdoor reset curve up or down as the need may be to maintain comfort levels and reduce energy consumption.
- In the warmer Summer and Fall months, the GSHP and buffer tank temperature reset curve is shifted down which decreases supply cooling demand.
- In the cooler Winter and Spring months, the GSHP and buffer tank temperature reset curve is shifted up which decreases supply heating demand.

Indoor Temperature Feedback Feature

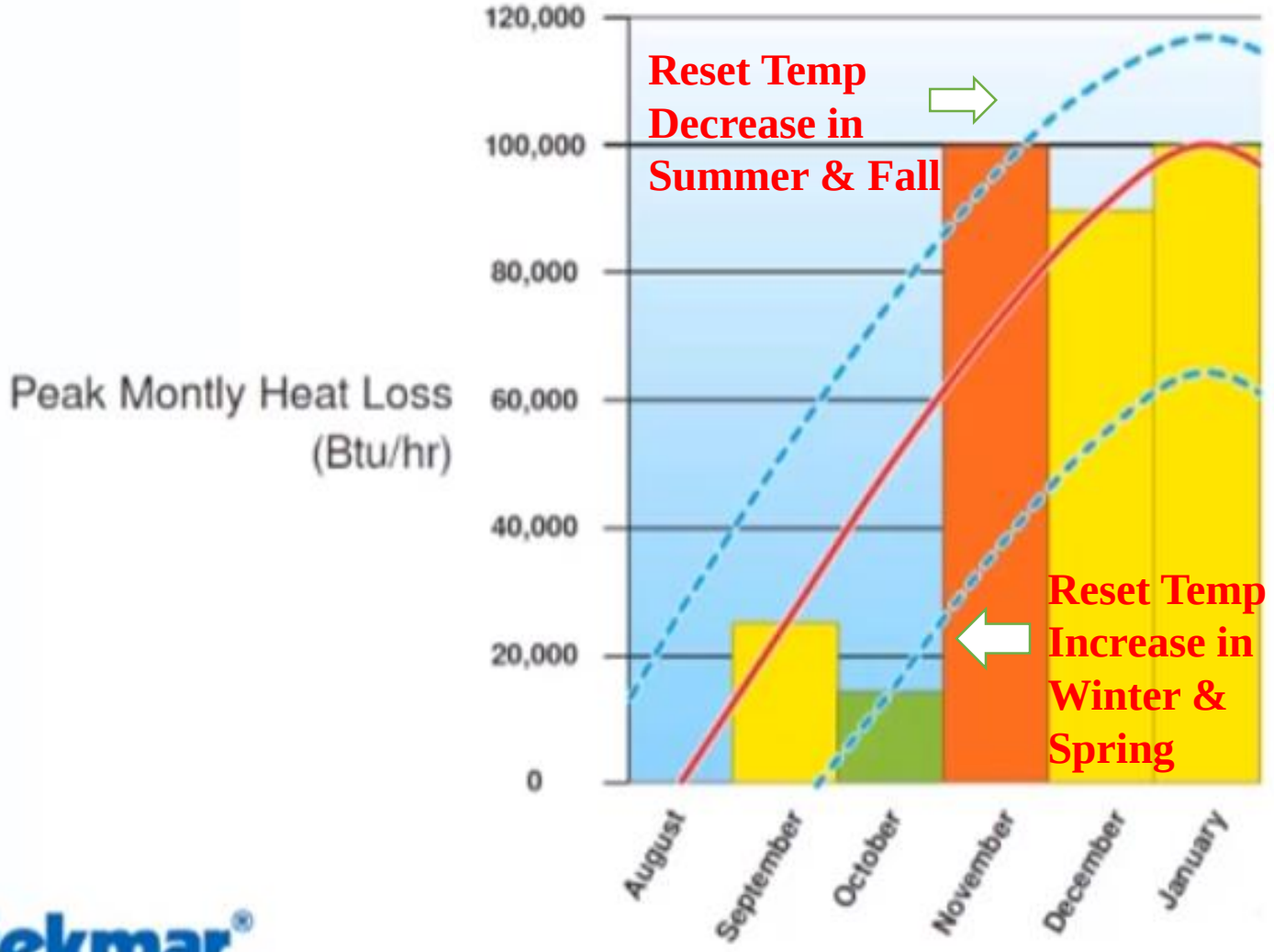

tekmar®

Increasing Energy Efficiency & Comfort

- The shifting of the Outdoor Temperature Reset curve using Indoor Temperature Feedback actually matches heat loss with heat production by the GSHP and buffer tank system.
- This results in decreasing energy consumption while maintaining occupant comfort.
- It also decrease short cycling and wear and tear on the entire GSHP system including supply and distribution components.

Effect on Supply Temperature

Indoor Temperature Feedback automatically lowers target temperatures in response to solar or occupant caused heat gains.

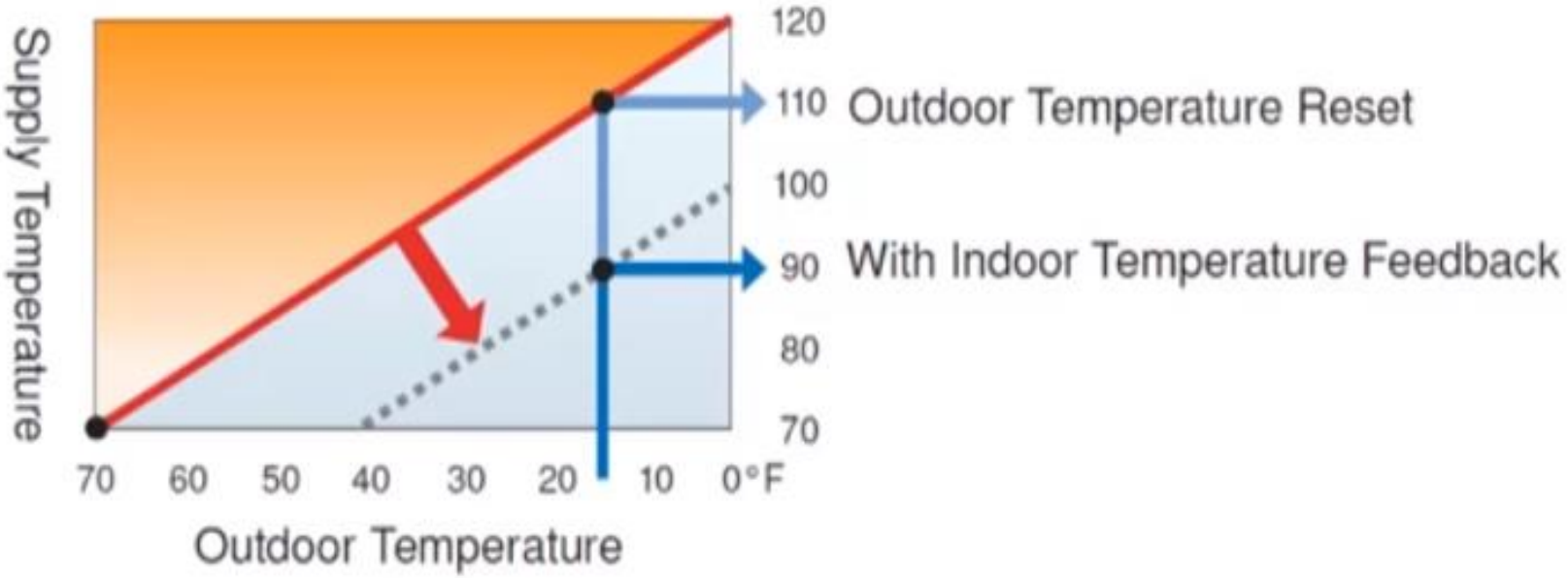

tekmar®

Decreases in Supply Temperature Result in Increases in COP

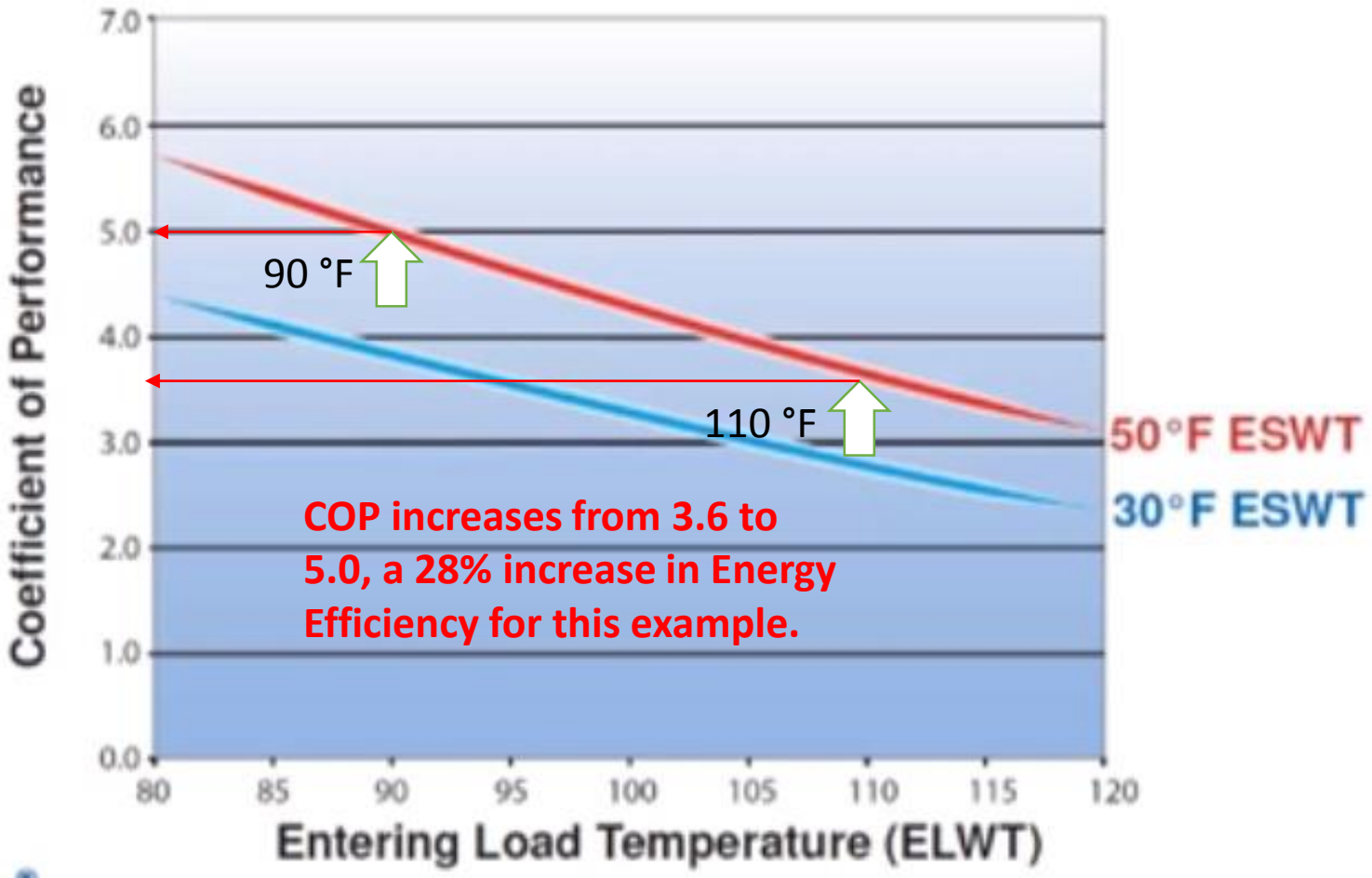

tekmar®

Synchronizing Zone Loads

Short cycling the heat pump will negatively impact it's COP.

Avoid short cycling by:

- Correctly sizing the buffer tank
- Synchronizing the zone loads

tekmar®

Different Temperatures for Various Zones

tekmar®

Effect of No Zoning on GSHP

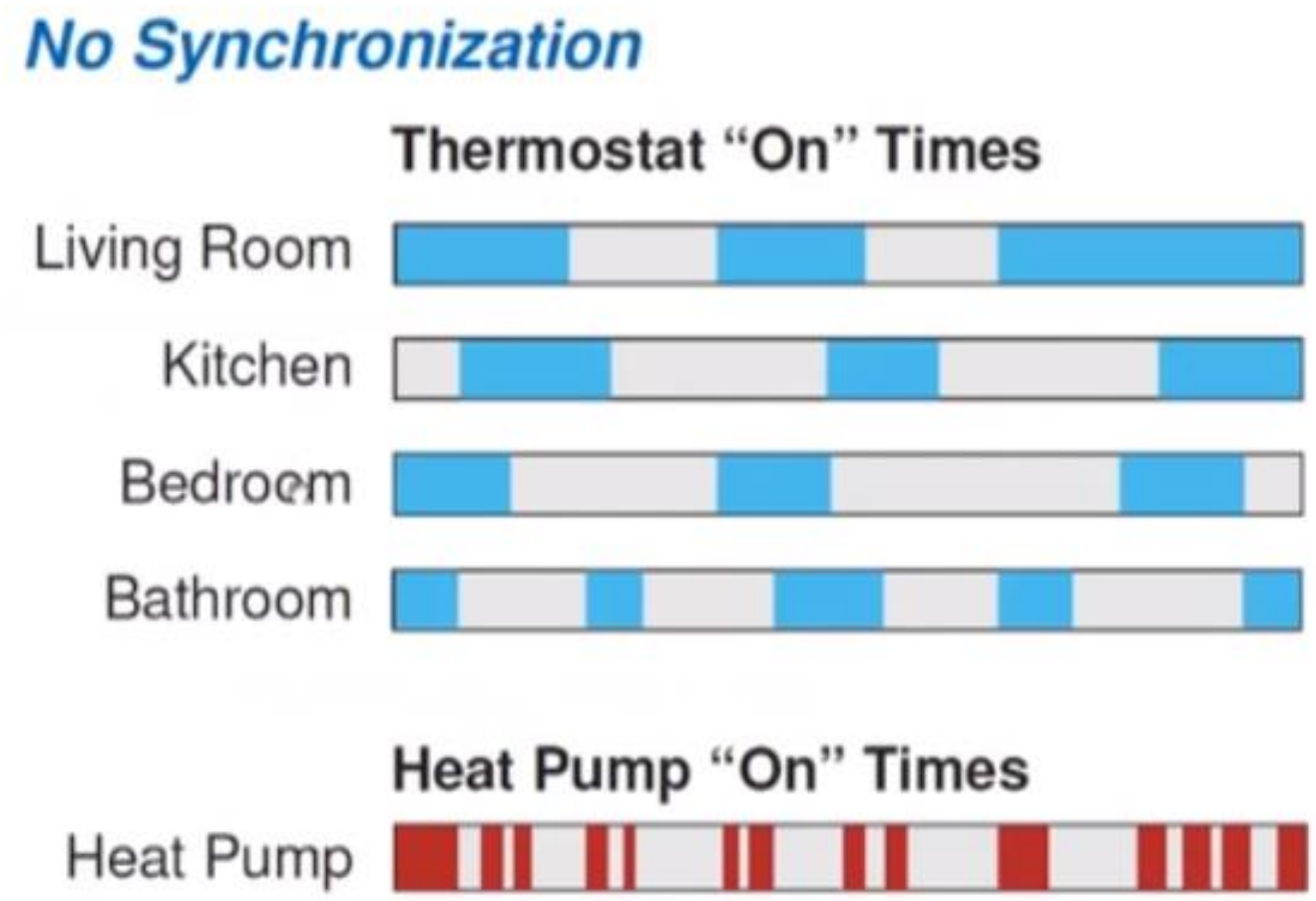

tekmar®

Smart Communication Technology

- Without zone synchronization the thermostats for the various zones are constantly turning the GSHP on and off which has a negative effect on performance (COP) and energy efficiency.
- Using communication tools, e.g., smart technology, zones are synchronized, e.g., they all start at the same time and turn off independently.
- This enhances occupant comfort, performance (COP), and energy efficiency.

Zoning Communication Schematic

- Synchronized start time and cycle lengths

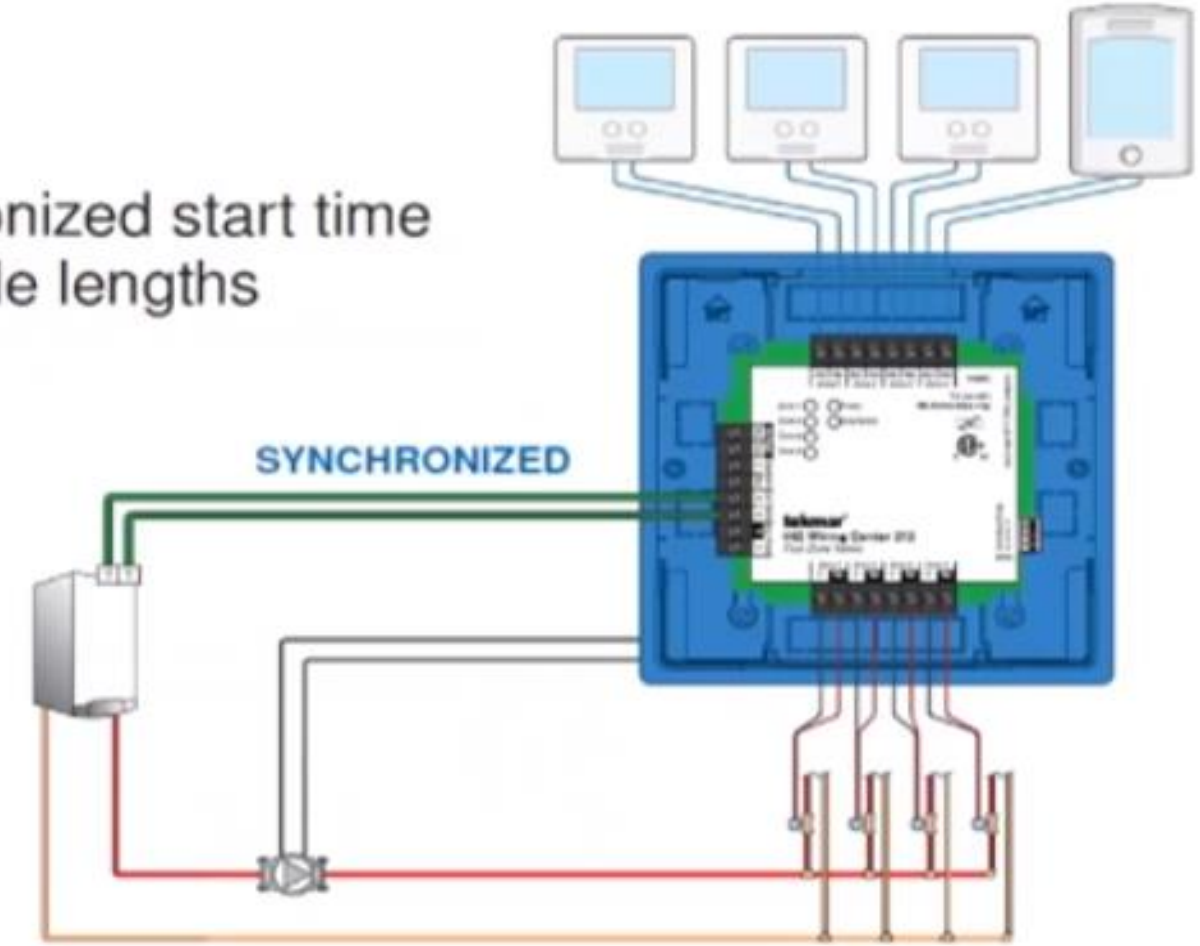

tekmar®

Effects of Zone Synchronization

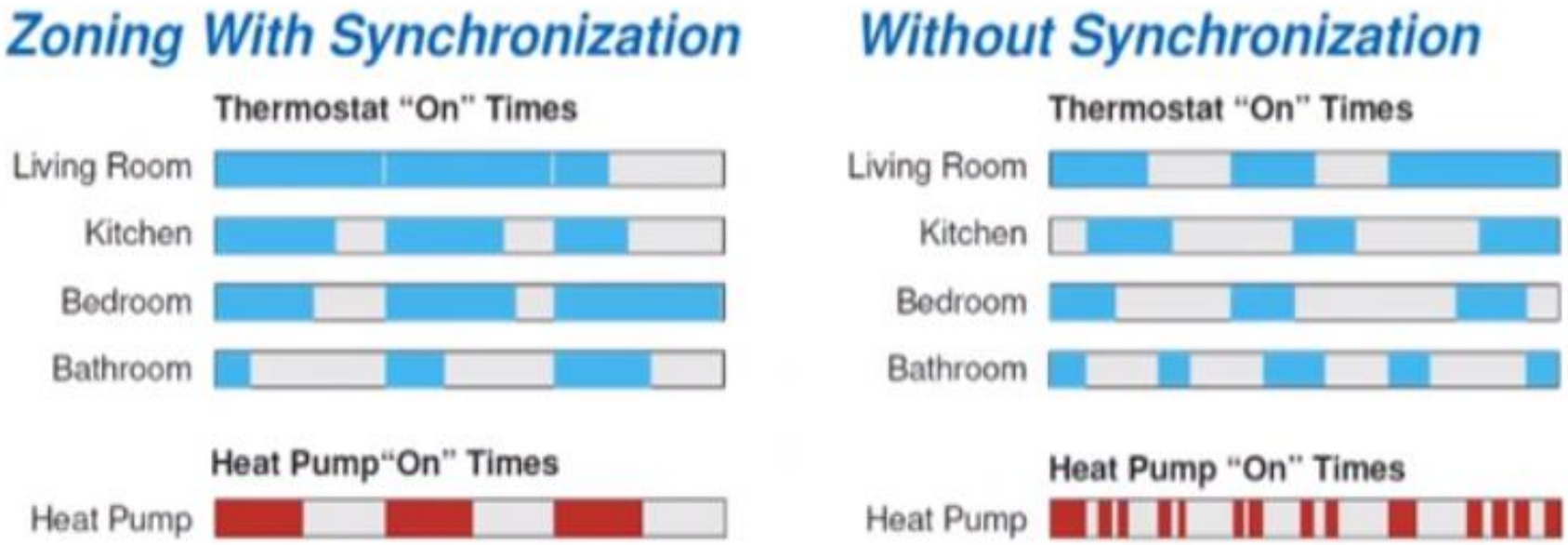

- Reduced equipment cycles
- Longer equipment life
- Higher operating efficiency

- Excessive equipment cycles
- Reduced equipment life
- Inefficient operation

tekmar®

Designing Radiant Floor Distribution System

- Begins with considering energy efficiency of the structure, determining zoning and type of floor plan utilized, choice of floor coverings desired, and type of supplemental forced air system that will be coupled with the radiant floor distribution system.
- Though tight envelopes with super-insulation and high performance windows and doors, and 100% variable GSHP, may not require a buffer tank, if it is integrated with a solar thermal collector, an insulated buffer tank will typically be required.

Low R-Value Floor Coverings

Low R-value floor coverings are best suited for low water temperatures.

Material	Typical Thickness	Typical R-Value
Sheet Vinyl & Vinyl Tile	1/8"	0.05
Ceramic Tile	1/4"	0.02
Marble	1/2"	0.05
Maple Hardwood	3/4"	0.66
Engineered Wood	3/4"	0.75
Cork	1/2"	1.18
Carpet - Wool (Low)	1/4"	1.50

tekmar®

Types of Radiant Floors

- Though hardwood floors and carpets are not desirable for maximum performance of radiant floor distribution systems, there are specialty products that can be used with most radiant distribution systems:
  - sub-floor radiant reflecting systems for wood floors
  - Low impact area rugs and low R-value padding for light carpets

Optimizing Heat Delivery

Tube spacing and floor coverings both impact heat delivery.

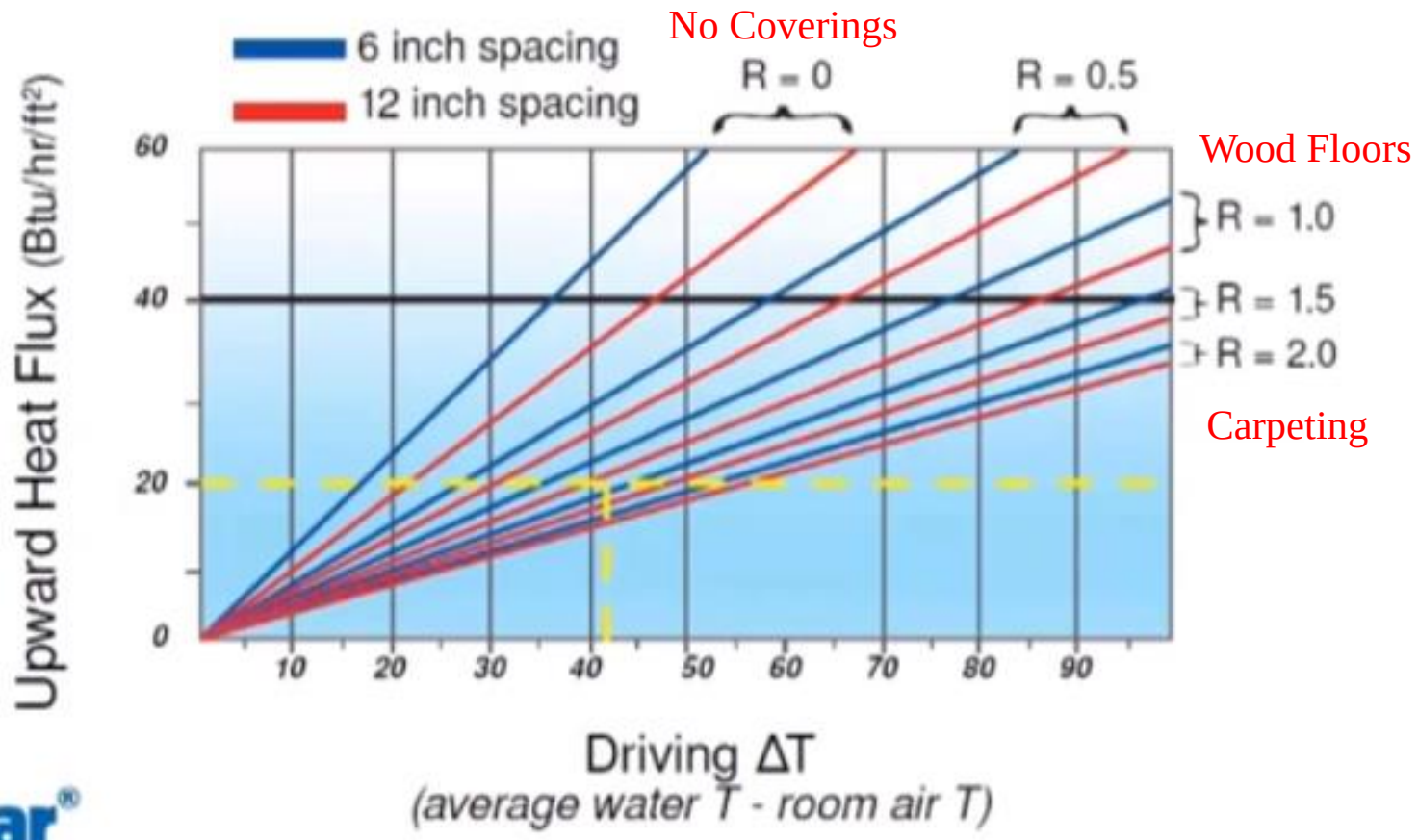

tekmar®

Maximizing GSHP COP

- Requires designing a radiant floor system that minimizes the change in average supply water temperature and room temperature.
- This requires choosing decorative concrete floors for the majority of floor coverings to maximize efficiency of the GSHP system.
- However, hardwood floors in the kitchen and carpeting in the bedrooms are usually desired and can be installed in a manner which minimizes thermal resistance by careful selection and closer tube spacing (e.g., as close as 4 inches, etc.).

General Guidelines for Radiant Concrete Slab Installations

- Tube spacing should not exceed 12"
- Slab should have a minimum of R-10 underside insulation
- Tubing should be placed approximately 2" below surface
- Bare, painted or stained slab surfaces are ideal (R = 0)
- Any floor finishes should have a total R-value of 1.0 or less

tekmar®

Radiant Floor Tubing

- Copper within concrete is highly susceptible to corrosion and a lifespan of 50 years for a radiant floor was considered exceptional.
- Today, modern plastics not only share many of the heat emitting properties of copper, but also provide greater flexibility, corrosion resistance, and a lifespan of over 100 years.
- Of these modern plastics, cross-linked polyethylene is by far the best and most commonly used material.
- With 7/8” XL PEX the manufacturers claim a heat output of at least 50 BTU’s per foot in a slab on grade installation and 40 BTU’s per foot in a floor joist application (though other manufacturers disagree due to the relatively high thermal conductivity of concrete).
- It is potable and ultraviolet resistant for protection against sun damage during installation.

Durapoly XL PEX Radiant Floor Tubing

Up to 400' length for zones and 16" maximum spacing for heating applications.

Up to 300' length for zones and 12" maximum spacing for heating applications.

7/8” Durapoly XL PEX Radiant Tubing

- The 7/8” Durapoly XL PEX is a large diameter tubing with the same wall thickness as the commonly used 1/2” PEX.
- It’s main advantage over 1/2” PEX lies in the fact that it holds more fluid, and consequently, more heat.
- It has a slightly lower temperature and pressure rating than 1/2” PEX, but it can be spaced as far apart as 16” on center and still heat a room insulated to modern standards (R-19 walls, R-27 ceilings). The DuraPoly manufacturers claim it would take twice as much 1/2” PEX to do the same job.
- The manufacturers claim it is the only cross-linked 7/8” PEX tubing on the market and its bending diameter is less than 20”, making it easy to thread through floor joists. This flexibility factor makes 7/8” PEX much less prone to kinking than other 7/8” PEX tubing.
- Minimum tubing is required to gain maximum heating results, providing saving on material and labor.

Radiant Heating & Cooling Application

- In order to maximize response and provide adequate cooling and heating, the PHMH could be designed with 7/8” Durapoly XL PEX radiant tubing at 8 inch centers, e.g., half of the spacing for a conventional heating application.
- At 50 Btu/ft. using 7/8” pex tubing, this approach will provide 75 Btu/sqft. for radiant heating systems; and could potentially increase efficiency of radiant cooling using the same distribution system for showcasing at the PHMH.
- The PHMH radiant floor heating and cooling mixing bus will be supplemented with a 2nd stage fan-coil bus using an ERV and if necessary SpacePack AirCell’s small duct high velocity (SDHV) technology.

1/2” ID PEX Radiant Tubing

- The 1/2” ID PEX is also a polyethylene tubing with a very high temperature and pressure rating (180 degrees at 100 psi).
- Manufacturers of Durapoly PEX claim it emits about half the heat of the 7/8” PEX, but its bending diameter is tighter.
- Using 1/2” PEX for small zones, tight crawl spaces, or snowmelt applications makes sense.
- It has a bending diameter of 15” and should be spaced 8” to 12” on center for heating applications, less for cooling.

Cross-Linking

- According to the Radiant Panel Association, cross-linking is: “a three dimensional molecular bond created within the structure of the plastic which dramatically improves a large number of properties such as heat deformation, abrasion, chemical and stress crack resistance.
- Impact and tensile strength are increased, shrinkage decreased and low temperature properties improved.
- Cross-linked tubes also have a shape memory which only requires the addition of heat to return it to its original shape when kinked.
- There are three types of cross-linking: **electron**, **peroxide**, and **silane**. Radiant Floor Company’s 7/8” PEX tubing is cross-linked with the electron process. It’s the cleanest, most environmentally friendly of the three methods.

Solar Thermal Collectors for Radiant Floors

- Though winter production is low, during the spring, summer and fall, an abundance of solar thermal energy will provide 100% of all heating and domestic hot water needs.
- Excess thermal energy produced during the summer could potentially be stored long-term via a thermal battery, e.g., a large super-insulated concrete cistern located underground for use during the winter.
- Most people are somewhat familiar with standard flat plate solar collectors. This collector is basically a highly insulated box containing a grid of copper pipes bonded to a flat black copper absorber plate. Special glass enhances solar absorption.

Evacuated Tube Collectors

- *Evacuated tube* collectors are an entirely different approach to solar water heating.
- Instead of many water filled copper pipes, these collectors use multiple vacuum filled glass tubes, each with a tiny amount of antifreeze hermetically sealed within a small central copper pipe.
- When heated by the sun, this antifreeze converts to steam, rises to the top of the tube, transfers its heat to a collector header, then condenses back into liquid and repeats the process.

Solar Energy Efficiency

- Because thermal energy doesn’t easily transfer through a vacuum, a substantial portion of the thermal energy hitting the absorber plate stays within the evacuated tube and passes to the collector header. This can be an advantage because a standard flat plate collector radiates much of its accumulated heat to the surrounding atmosphere like any other hot object.
- The evacuated tubes are also completely modular. Although rarely necessary, one or more tubes can be removed and replaced without affecting the other tubes in the array. There is no actual liquid transferred from the evacuated tube to the collector header...just heat.
- Evacuated tubes also start absorbing heat earlier in the day than flat plates due to their convex design and the tiny amount of antifreeze within the tube is freeze protected down to -50 degrees below zero.

Solar Thermal Honeycomb Collector

- While the sun is the most abundant and potentially cheapest source of heat energy, current solar collectors' efficiency and financial viability fail exactly when and where demand for heat is greatest - in cold countries and demanding applications (with high differential temperature from ambient).
- TIGI has developed the Honeycomb Collector – a new breed of solar thermal collector using breakthrough proprietary technology, which offers very high efficiency even in cold climate and demanding applications, producing year-round heat energy for a cost dramatically lower than any available alternative, including natural gas.

Honeycomb Technology

- At the heart of TIGI’s breakthrough is a highly efficient, transparent insulation technology incorporating proprietary components and design. Sunlight passes through the honeycomb transparent insulation, heating the energy collecting surface.

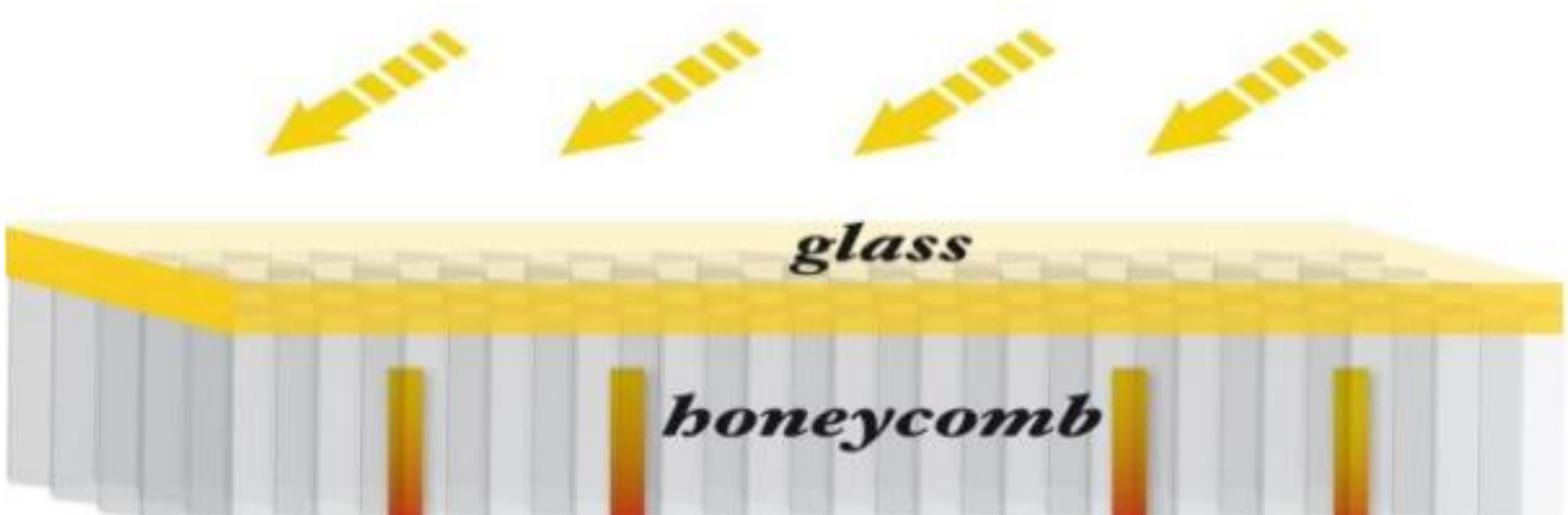

Honeycomb Technology cont.

The honeycomb layer suppresses convection and conduction heat losses, since turbulent flow is restricted to the air gap between the honeycomb and the energy collecting surface.

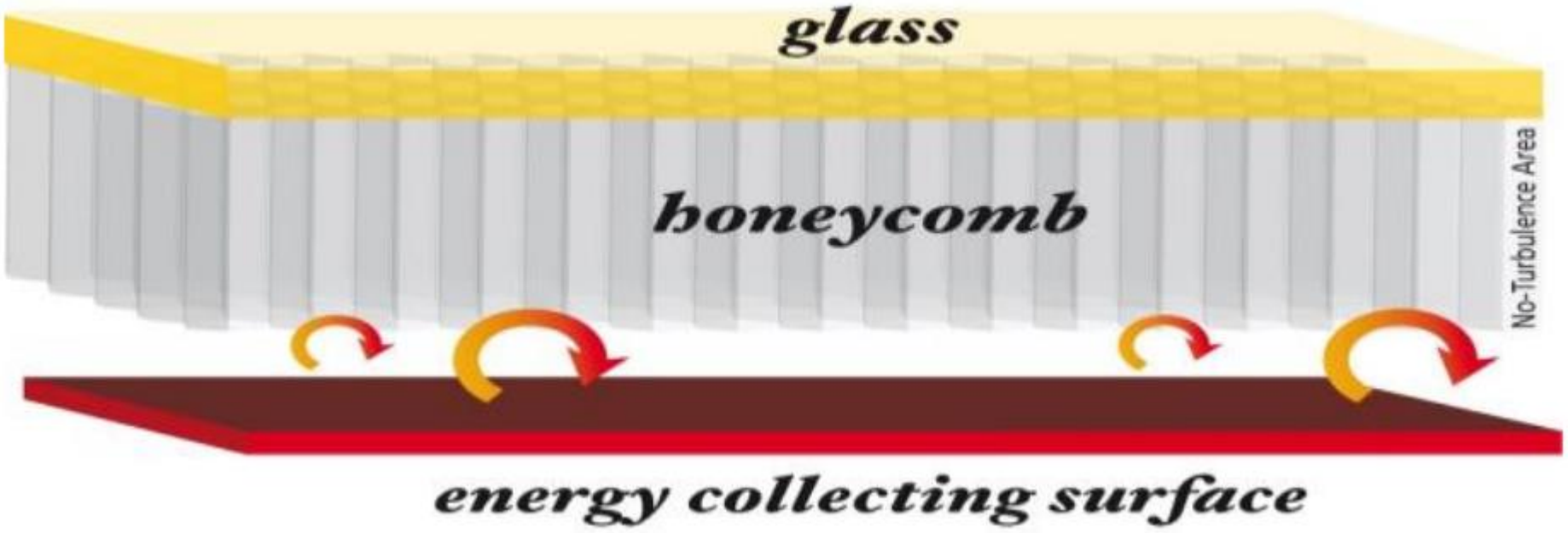

Honeycomb Technology cont.

The honeycomb suppresses thermal back-radiation.

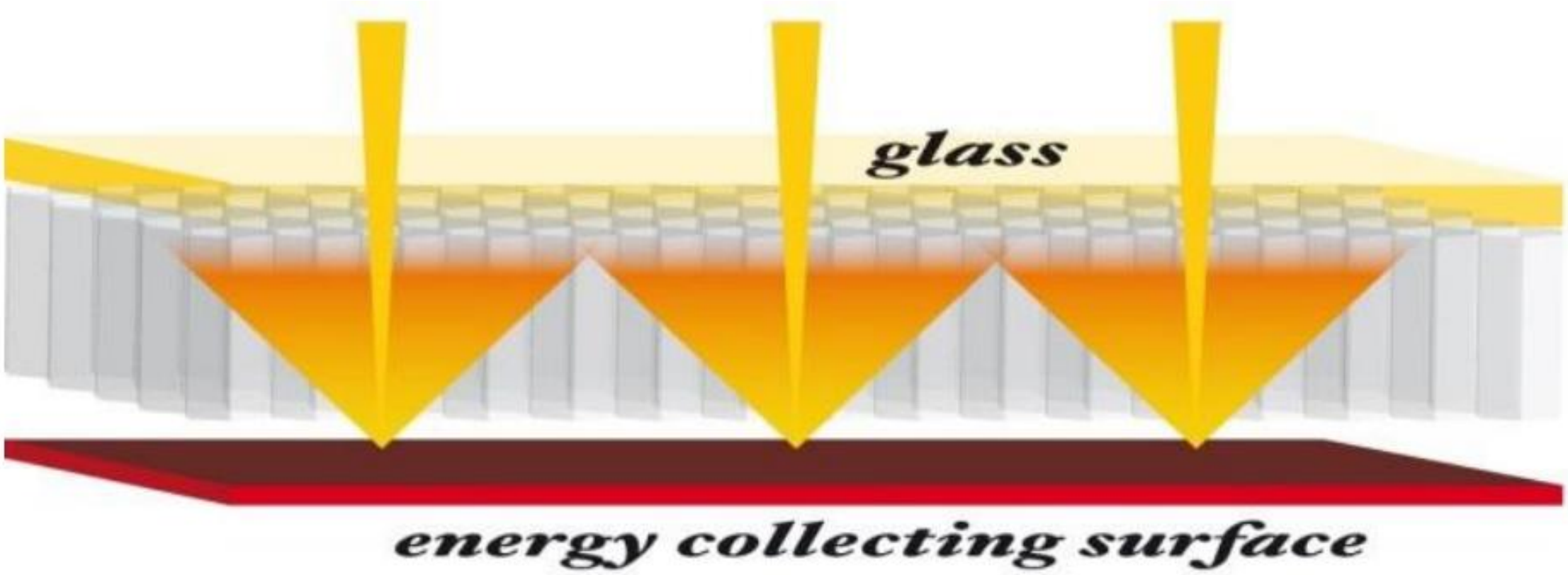

Honeycomb Technology cont.

- The result is a collector with a very high energy efficiency, allowing energy to enter freely while limiting energy losses even when thermal differentials are high.
- Overheating due to this very high efficiency is prevented with a proprietary integrated overheat protection device which releases heat to the environment at a preset temperature (another solution may be simply to increase flow rate through the honeycomb collector in conjunction with a relatively large thermal battery).
- http://www.tigisolar.com/assets/files/Honeycomb%20Collector%20whitepaper%20Oct11(1).pdf

Solar Thermal Honeycomb Collector

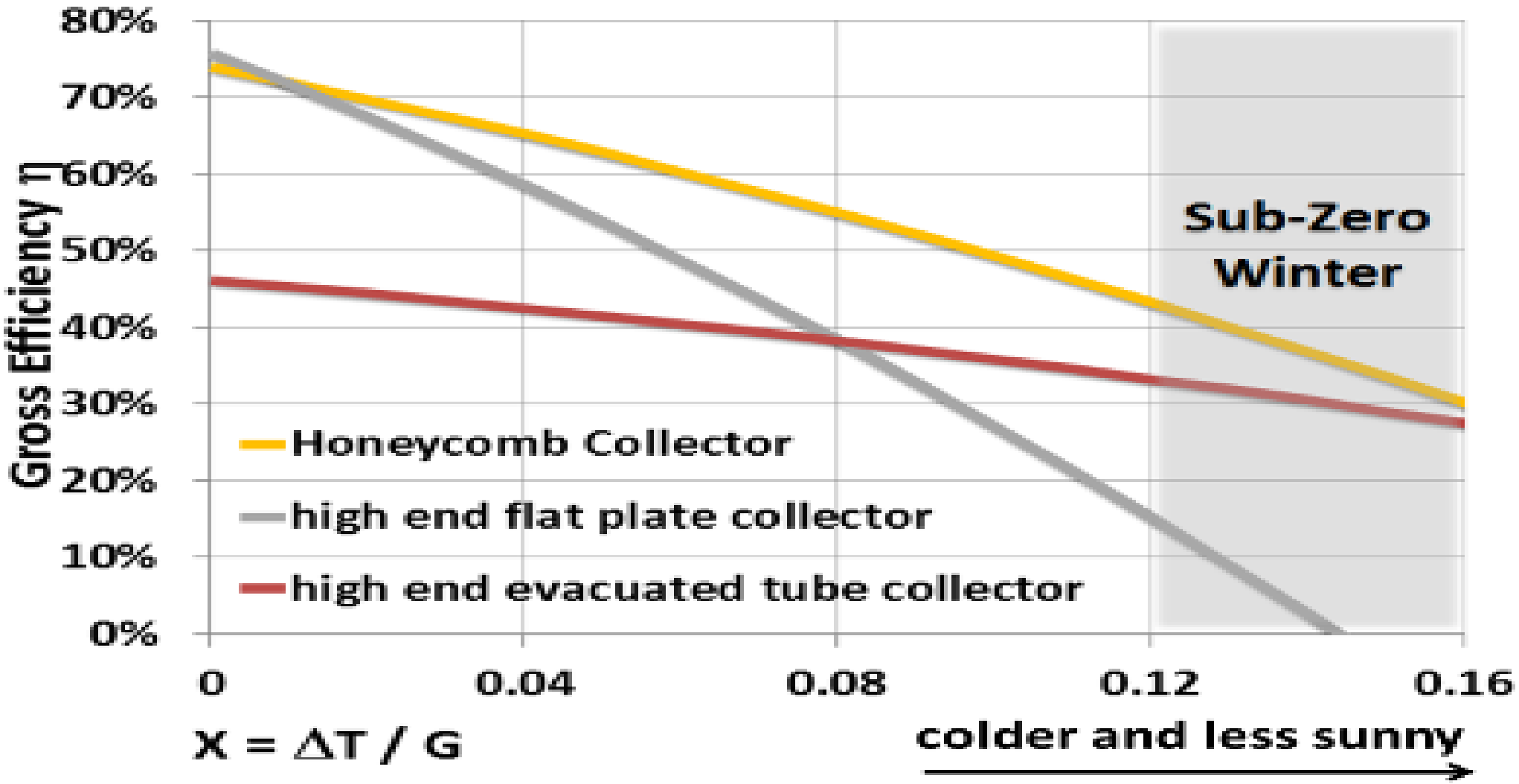

Boston, MA - Pilot Results - Mar 2011

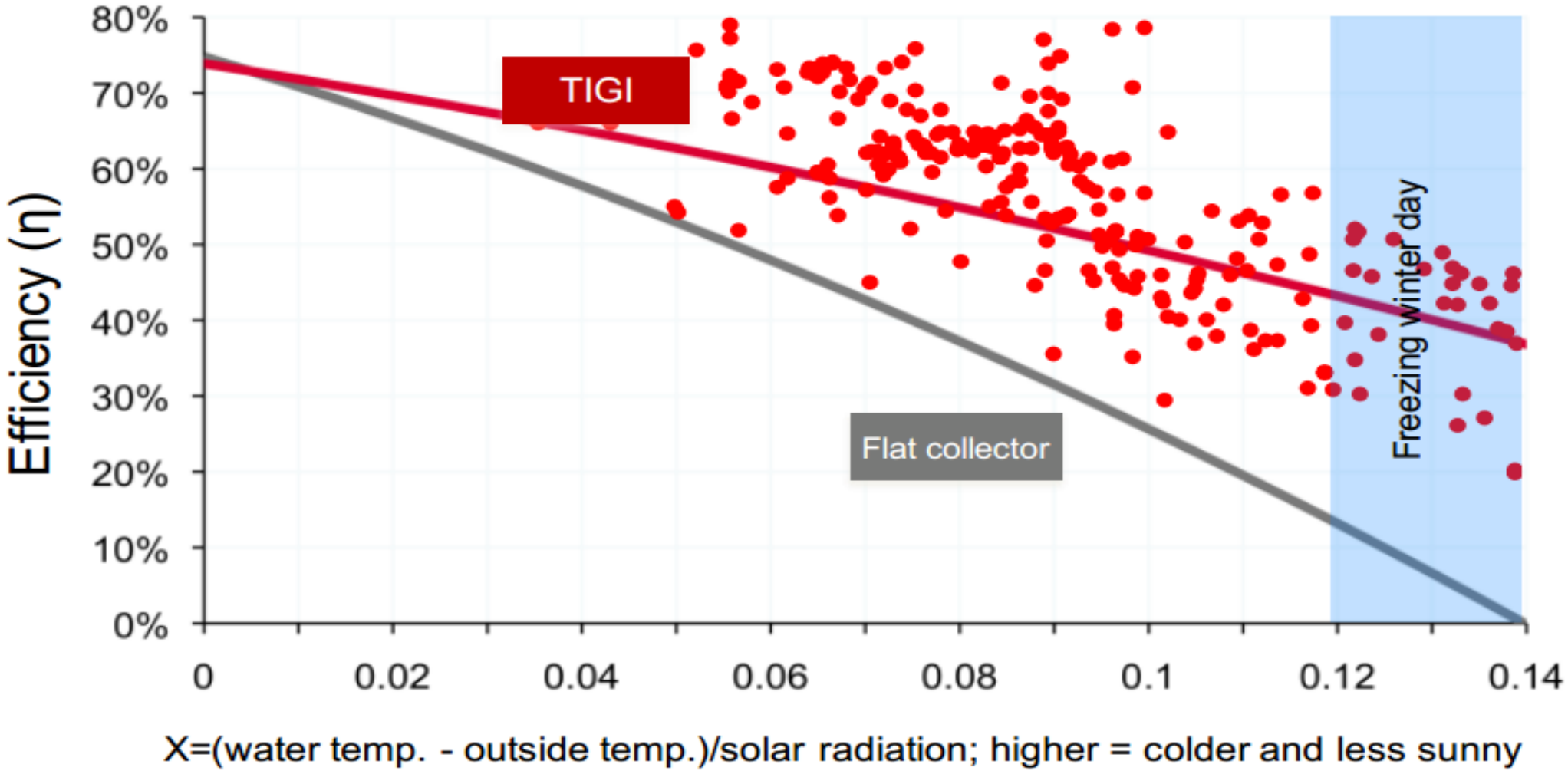

Actual collector efficiency calculated from temperature profiles.

Summary of Honeycomb Collector Technology

- TIGI’s Honeycomb Collectors have been installed and tested on 3 continents in varying climatic conditions during the winter and spring seasons of 2011.
- The design is projected to work more effectively in diffuse light (during hazy or cloudy days) than other solar thermal collectors, making it particularly attractive in cold and temperate climate zones.
- At all three sites, data indicates performance consistent with that predicted during independent testing at SPF, with efficiencies remaining above 50% even in the presence of 80 K temperature differentials between ambient and collector interior.

Honeycomb Collector vs. flat plate collectors

- TIGI brings a new type of enhanced, transparent insulation equipped, line of collectors, outperforming alternative collectors, especially in cold climate or high temperature differential applications.
- Honeycomb Collector performs on par or better than high-end evacuated tube collectors but at lower cost and longer lifetime.
- Honeycomb Collector brings all the benefits of flat plate collectors, while producing up to five times more useful energy in cold climates and in demanding applications!

Additional Honeycomb Testing

- The Green Proving Ground program, in association with a federal laboratory, is currently subjecting the honeycomb thermal solar collector to real-world measurement and verification in GSA buildings.
- Findings from that investigation will be available in late 2013 or early 2014.

Active Solar Thermal Parabolic Tracker

- 6 linear parabolic reflectors concentrate all the sun’s energy on the black copper tubes of the tracker’s thermal panel.
- The heated transfer fluid flows through the tubes and carries the heat to a storage tank.
- The panels photo sensors in the top of the panel look at the sun, compare the brightness and turn on the motor to track the sun across the sky. The thermal panels reflectors return to the east at the end of the day.
- The tempered glass cover protects all the internal parts providing lower maintenance and longer life cycle.

SunTrac Tracking Concentrator Performance 50% More Energy Produced

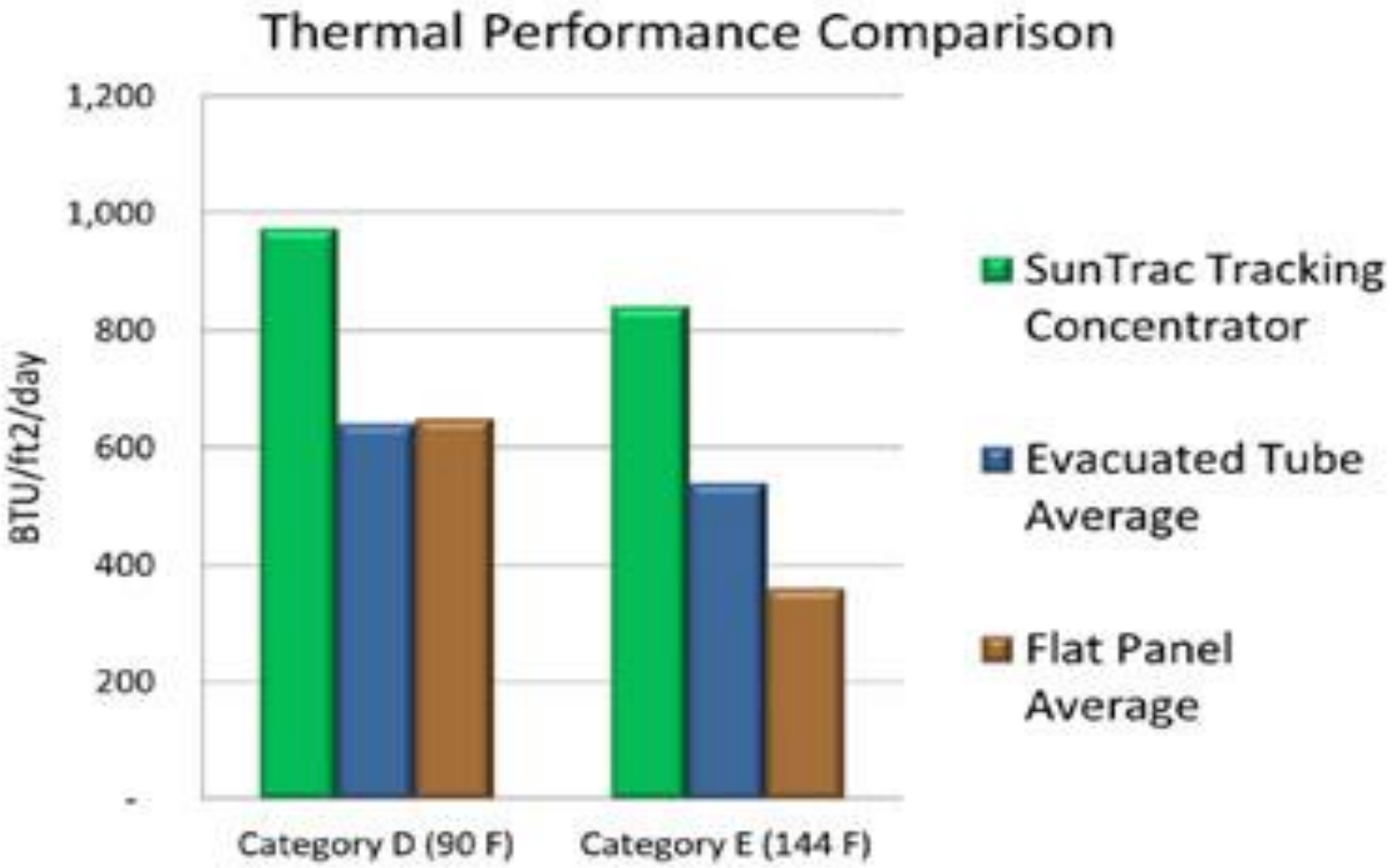

Relatively Quick ROI

- The SunTrac Solar Thermal Tracker is the first to combine low installation cost characteristics of flat plate designs with proven high temperature yields of tracking parabolic concentrating panels.
- Operating at temperatures up to 250 °F, the manufacturers of the SunTrac solar thermal tracker system claim that it has a faster payback than either passive flat plate or evacuated tube panels.

Solar Thermal Heat Exchanger System

- The PHMH solar thermal system will use an efficient heat exchanger to separate the potable domestic water supply from the floor’s antifreeze mixture.
- Since the solar collector for the PHMH will be exposed to the weather, anti-freeze and a heat exchanger will be necessary to provide freeze protection to -60 °F.
- However, the heat exchanger will slightly decrease efficiency by transferring heat from one medium to another. (in this case, from potable water to anti-freeze via the heat exchanger).
- The heat exchanger itself will radiate heating and cooling into the surrounding air the utility room.

Solar Thermal Heat Exchanger

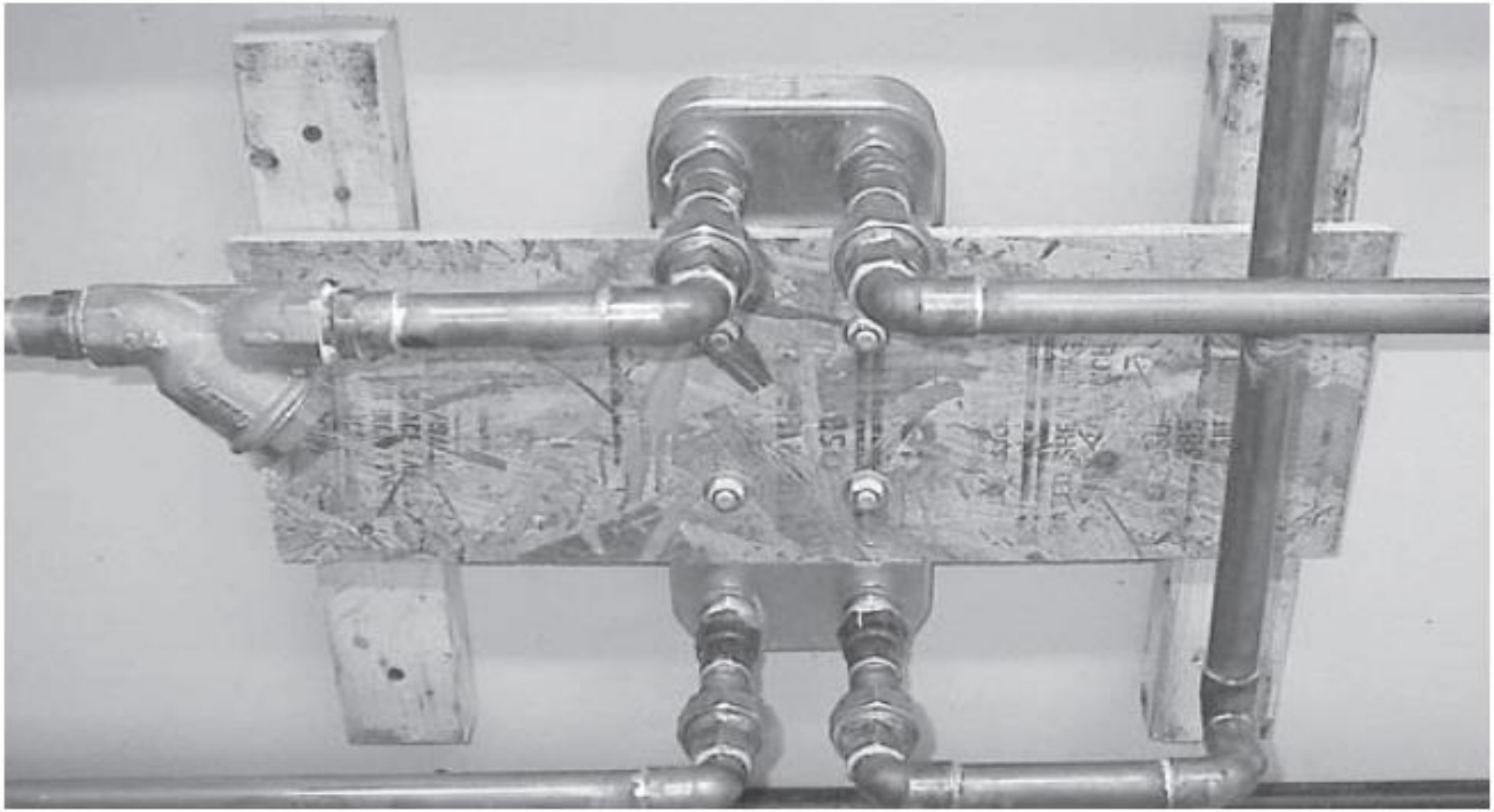

Solar Thermal Radiant Floor Schematic

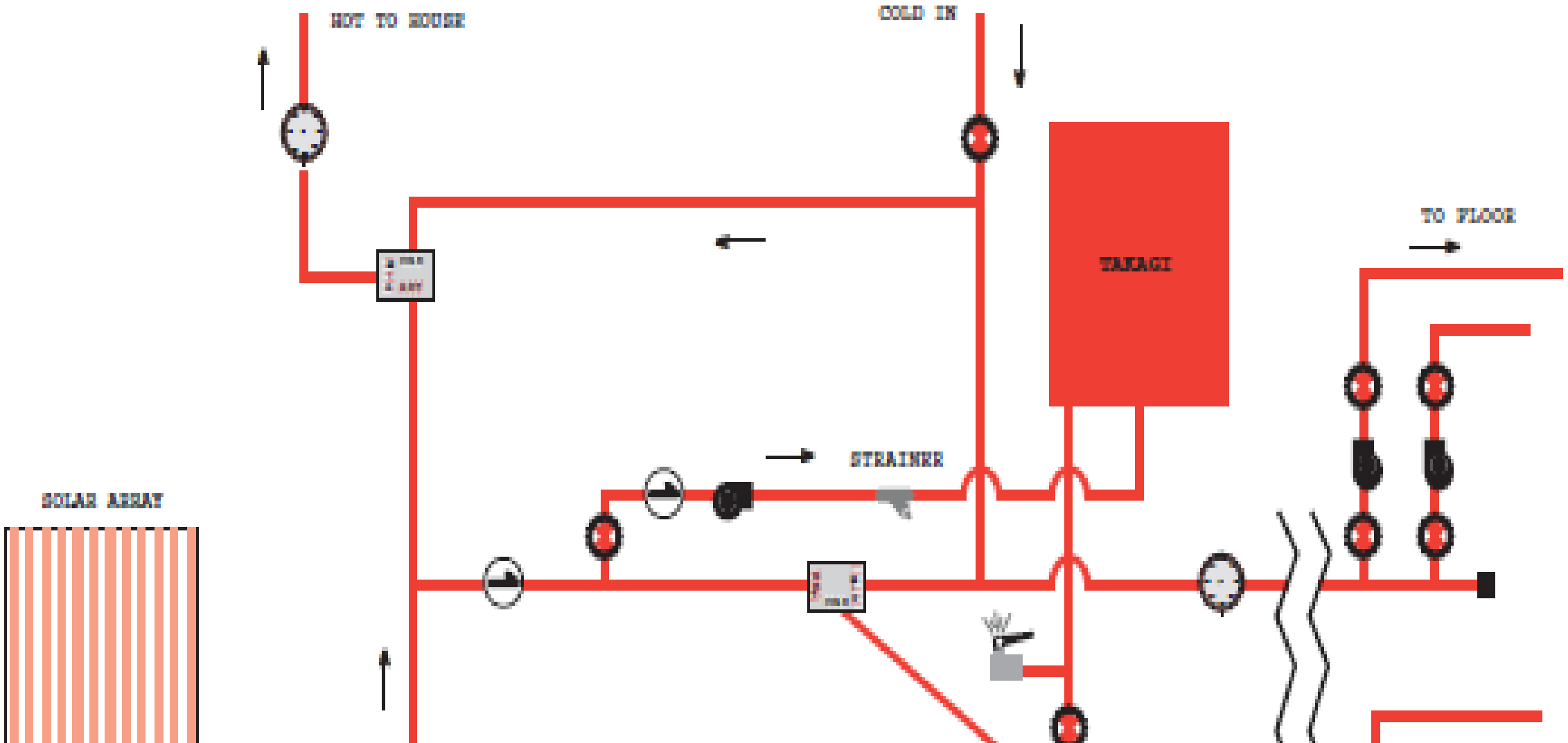

Solar Thermal Radiant Floor Schematic Open System

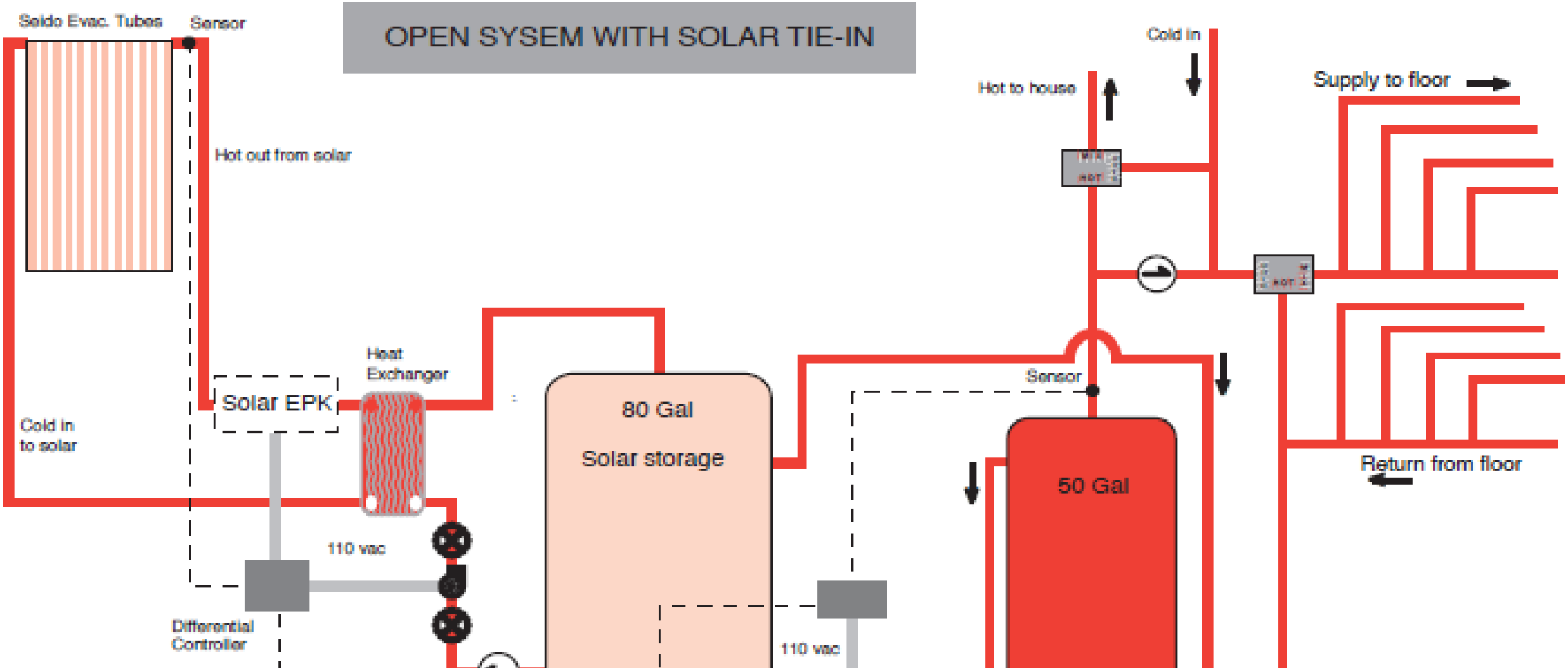

Radiant Floor System Zoning

- Unless the heated area of the floor plan is very small, it will likely be broken up into several “zones”.
- A zone is any area controlled by a single thermostat and supplied by a single circulator pump.
- A zone can be tiny or huge. A zone can consist of many “circuits” or “loops” of tubing, or can be a single circuit.
- **Circuit** lengths should not exceed 400’ of tubing, but a **zone** may contain any number of circuits.

Radiant Floor System Zoning cont.

- Zoning entire sections of a floor makes more sense.
- A block of rarely used bedrooms could be on their own zone, for example.
- Also, many people prefer to maintain their master suite at a cooler temperature than the rest of the living space.
- If there’s a lifestyle reason to maintain one section of a given floor at a noticeably warmer or cooler temperature, then zoning is appropriate.

Radiant Floor System Zoning cont.

- Another example would be architectural features like sunrooms or great rooms with lots of glass. These rooms have a heat signature unlike the rest of the living space. During the day, a sunroom can be 20-degrees warmer than the living room. If the thermostat controlling the zone is located in the living room, the sunroom will receive heat it doesn’t need.
- The reverse is also true. High glass areas give off lots of heat at night. Trying to keep the sunroom warm during a cold winter night would overheat the rest of the living area if both spaces shared the same zone.
- Of course, it goes without saying that window shades greatly reduce nighttime heat loss in high glass areas and should be installed whenever possible

Multiple Circuits

- Since the smaller ½” PEX is limited to a 300 ft. run, and the 7/8” PEX to about 400 ft., if a zone is large enough to require more than 400 ft. of 7/8” PEX, the heated area must be broken up into multiple circuits, all approximately the same length.
- Similar lengths are important because you never want to give the water a “path of least resistance” to follow. If your zone consisted of three circuits, one 200 ft. long, and two 100 ft. long, the two shorter circuits would steal the water from the longer 200 ft. circuit because they would offer the pump less resistance. An inefficient heating system would result.
- All circuits should contain the same lengths of tubing!

Zone Manifolds

- A tank of efficiently heated water won’t do much heating unless it can be distributed effectively to through zone manifolds.
- This is simply a factory built manifold containing all the gauges, valves, pump flanges, etc. (see illustration) necessary to mount multiple circulator pumps in one central location.
- It’s normally installed very near the heat source so that any pump, when activated by a signal from the zone, can draw hot water and send it to the floor.
- ***If for some reason, the Zone Manifold is not located within 6 feet (3 feet for on-demand units) of the heat source, the pipe size between heat source and manifold should be increased in direct proportion to the distance.***
- ***Never use any piping material except copper to connect the heater to the Zone Manifold, i.e. never use PEX, PVC, ABS, black iron, or garden hose for this purpose.***

Zone Circulator Pumps

- Every zone always has its own circulator pump. That way, the pump can be sized to match the amount of tubing in the zone.
- The fluid from the pump then enters the supply line to the zone, travels through the floor, then returns to the heat source.

Radiant Floor “Supply” and “Return” Lines

- Every circuit of radiant tubing will have a beginning (supply) and an end (return).
- In a slab installation, the supply line is run to one side of a slab manifold that has already been installed as part of the slab pour.
- After travelling the entire length of the circuit, the fluid flows into a return pipe, also ¾” copper.
- This return pipe leads back to the heat source where the water is re-heated and sent back to the supply side of the circuit.
- This cycle repeats until enough heat has entered the space to be warmed.
- Only when the thermostat in the zone has been satisfied will the zone pump shut off.

Using Copper Adaptors

- Normally, all supply and return lines are insulated with foam pipe insulation or fiberglass. This is to prevent heat loss as the water travels to and from the heated floor.
- Most of the time, supply and return lines are made of ¾” copper pipe. This is because you are already in copper pipe mode when you leave the circulator pump.
- Getting from copper pipe mode to PEX tubing mode requires a brass fitting called an adaptor. As the need arises, the installer can “adapt” from a copper supply line to the PEX tubing, or adapt to a copper return line from the PEX tubing by simply using a stub of pipe and a standard copper tee, 90, or coupling.
- Adaptors are very handy fittings. The ability to convert from copper to PEX, and back, at any time, gives the installer a great deal of flexibility when it comes to running supply and return lines. Adaptors can be used to overcome and make super tight bends.

Pex Tubing Adapters

Pex Tubing Couplings

- Whenever the installer needs to connect PEX to PEX, use a coupling.
- Badly kinked, punctured, or crushed tubing can be easily repaired using couplings.
- Like adaptors, couplings are brass fittings that guarantee a tight, permanent connection.

Radiant System Slab Manifold

- More than merely a method of splitting a supply feed into two or more branch circuits, the slab manifold doubles as a pressure test kit.
- Built into every manifold is a pressure gauge and an air stem. Once the tubing has been installed and all the connections have been tightened, use the air stem and an air compressor to pressurize the system to 50 psi. If several hours pass without any significant drop in pressure, you can rest assured that your tubing is ready for the pour.
- The manifold is also useful as a safety gauge during the pour itself. If at any time you question the integrity of the system, checking the pressure gauge will tell you instantly whether or not the tubing has been damaged.

Radiant Tubes Manifold Testing Setup

Heating & Removing Pressure Test Assembly

Four Loop Slab Manifold

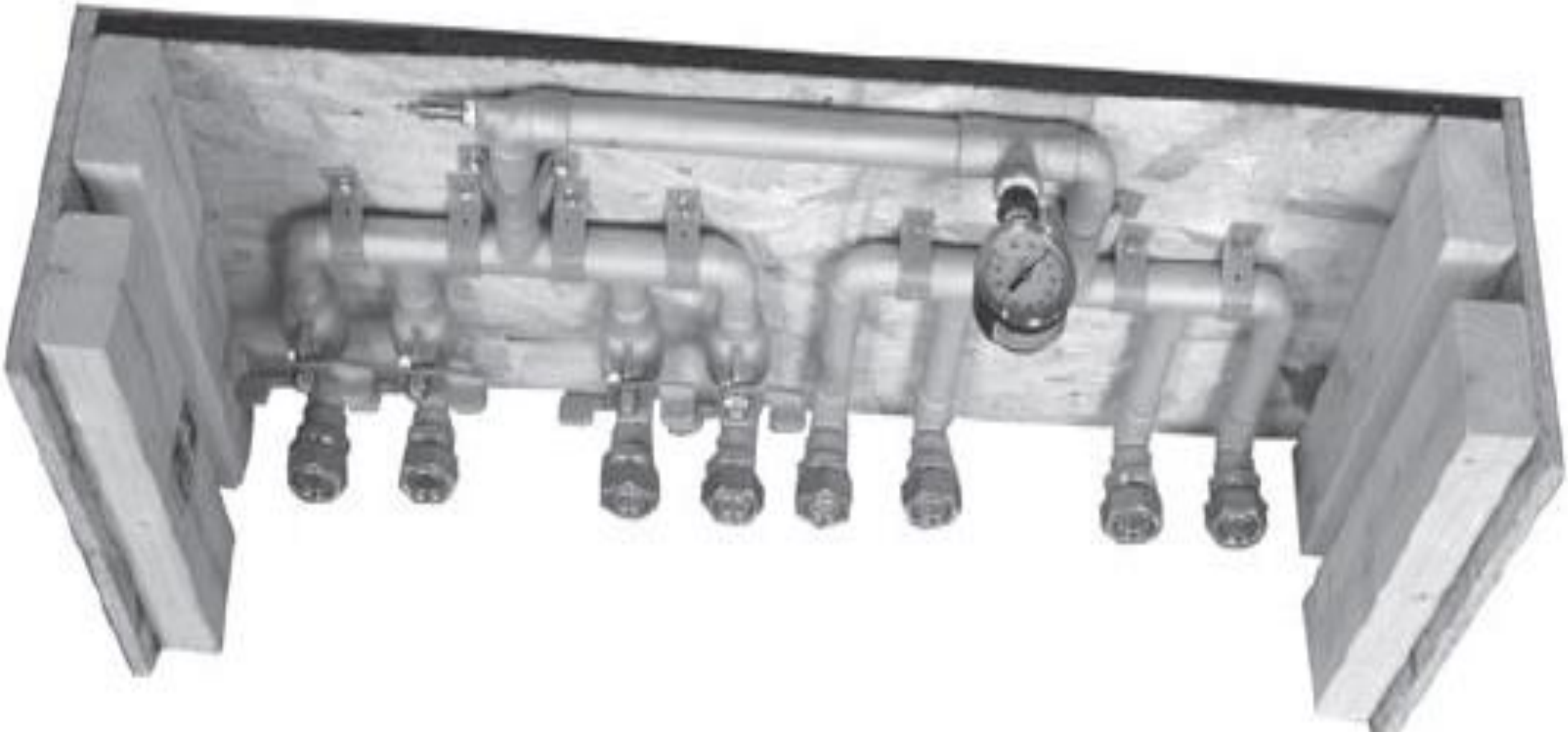

Common Pex Radiant Tube Layout Design

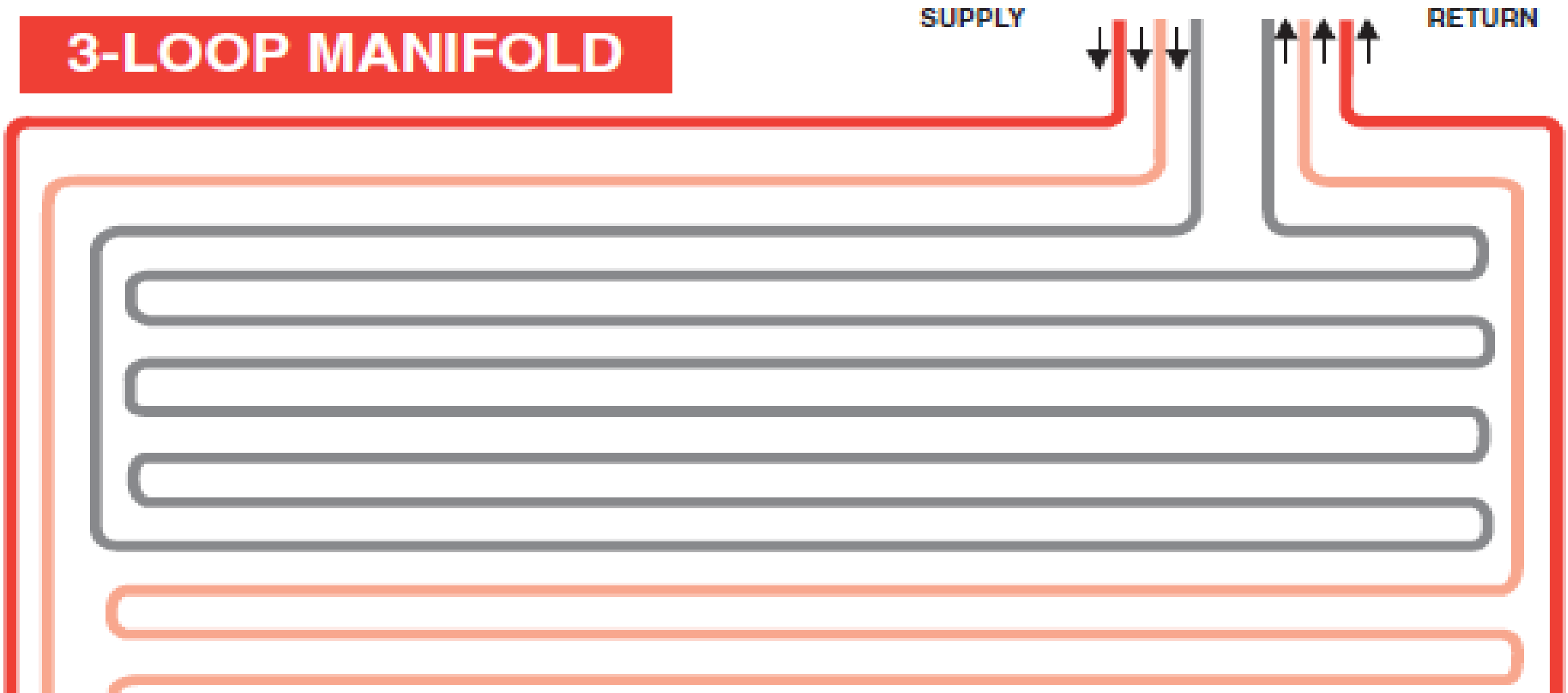

Forced Air Delivery

- Since radiant heating and cooling cannot meet all of a structure's load requirements and cannot regulate humidity, a second stage forced air system is ideal for coupling with relatively "slow response" radiant flooring distribution.
- For example, the same GSHP system can be utilized to provide hot can cold water to the coils of an ERV, providing ventilation, dehumidification, and filtering in addition to "rapid reponse" forced air delivery.

Integrated Radiant and Forced Air Delivery System via GSHP

Radiant installations cannot always satisfy a zone's heating load, and second stage heat emitters must be considered.

tekmar®

Two Stage Delivery Design

- Since forced air delivery normally uses higher temperature water for heating and lower temperature for cooling than radiant floor distribution systems, larger coils (or new low water content heat/cool fan coils are now available) in forced air systems can be used to compensate for the differences in water temperatures.
- Thus, through larger coils and mixing systems, the same GSHP and buffer tank can be efficiently used for integration of radiant floor and forced air second stage distribution systems.

Designing Forced Air Second Stage System

Fan coils can be used with hot or chilled water, and must be sized larger to account for the lower water temperatures.

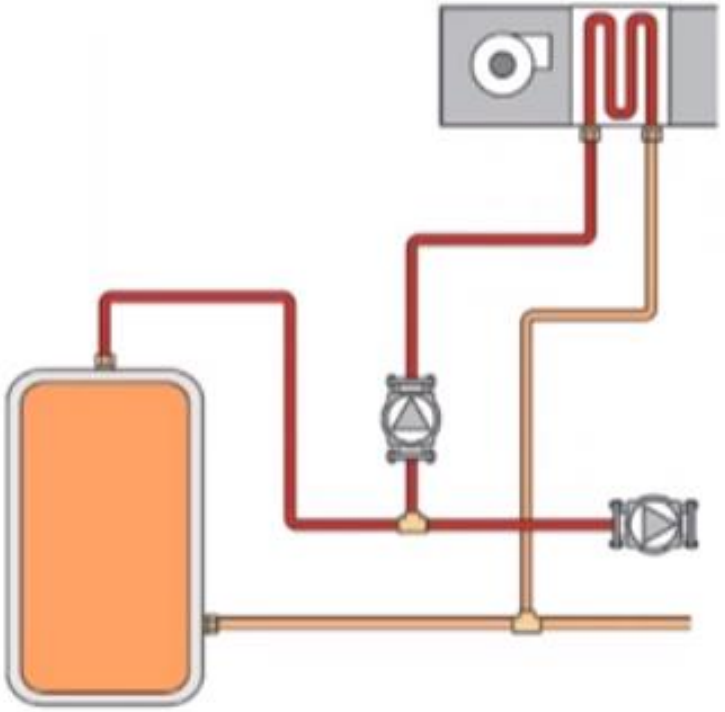

- Low water content heat/cool fan coils are now available

tekmar®

Mixing Technology

- Though maximum energy efficiencies and GSHP COP can be achieved for two stage delivery systems using the same hot and cold water temperatures, this is not possible for all distribution system designs, especially for rapid temperature swings in both outdoor and indoor environments due primarily to solar radiation/gain.
- In those cases, dual temperature systems can be provided for two stage HVAC systems via mixing technologies such as Variable Speed Injection.

Second Stage Mixing Device

A mixing device will let us control the water temperature for both the radiant and for the second stage heat installations.

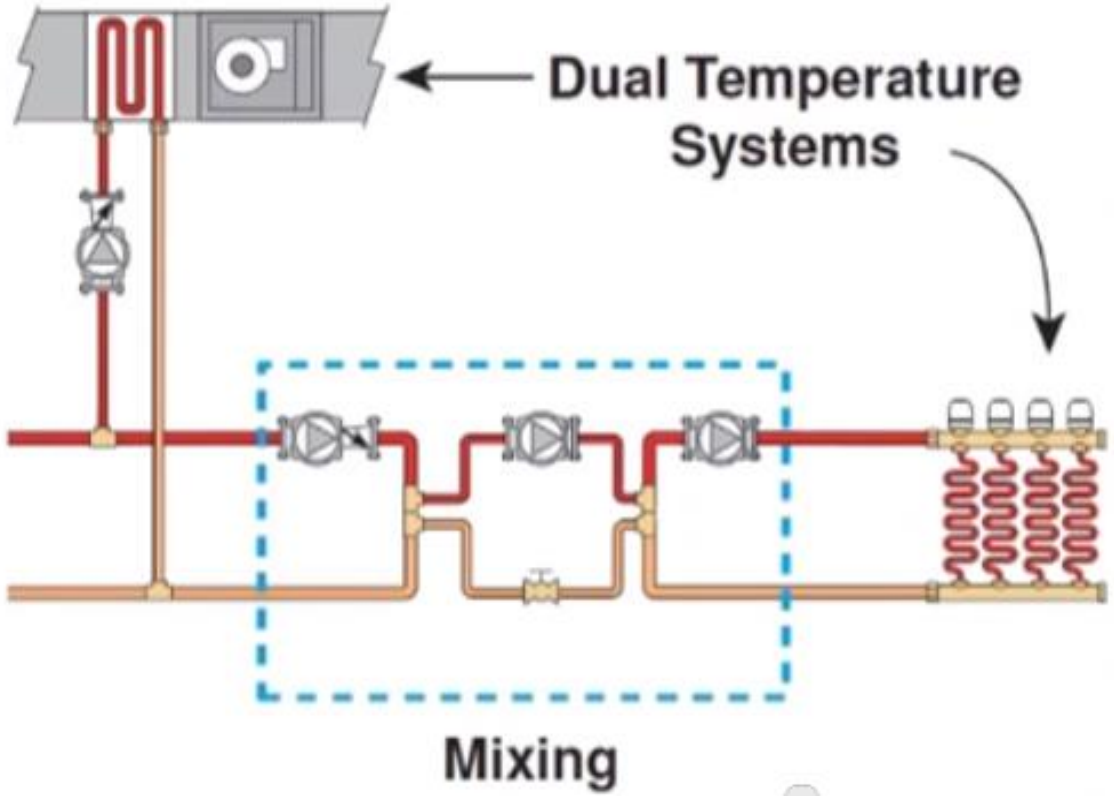

tekmar®

Variable Speed Injection

Variable speed injection is one method of including mixing in the mechanical design.

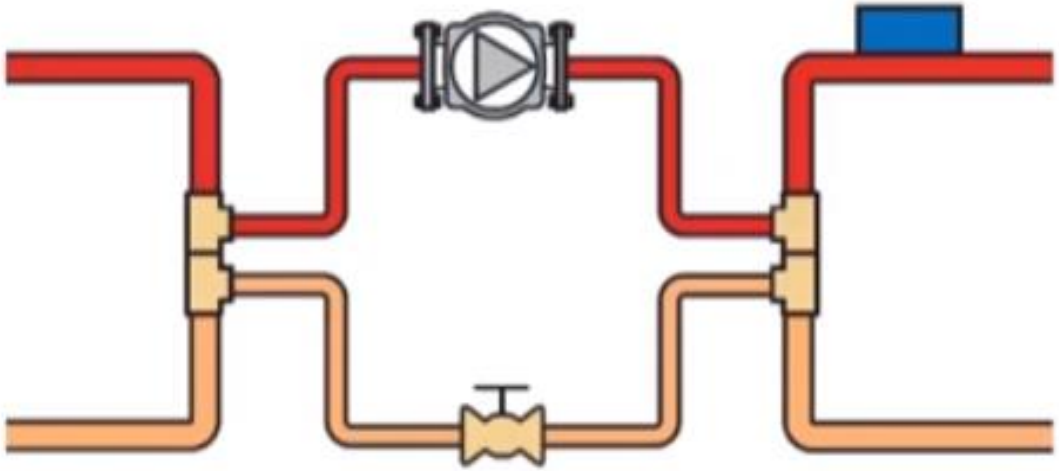

- Quick response
- Uses standard wet rotor pumps
- Easy to service
- Limited in size

tekmar®

Mixing Control For Two Stage & Hydronic Heating Systems

- There are three important features required for the proper operation of a hot water heating system:
  - Outdoor Temperature Reset
  - Boiler Protection
  - System Protection

Outdoor Temperature Reset

- In a hot water heating system, the greatest comfort and energy efficiency is obtained when the supply water is constantly circulated through the heating system and the temperature of the water is adjusted to match the heating load. Since the heating load is largely dependent on the outdoor air temperature, the heating system can be controlled by making the supply water warmer as the outdoor air becomes cooler.
- This outdoor reset function requires that the heating system is able to safely and continuously provide the full range of supply water temperatures. In a hot water heating system, the full range of water temperatures required can be obtained through a device which mixes some hot boiler supply water with the cooler system return water.

Outdoor Temperature Reset cont.

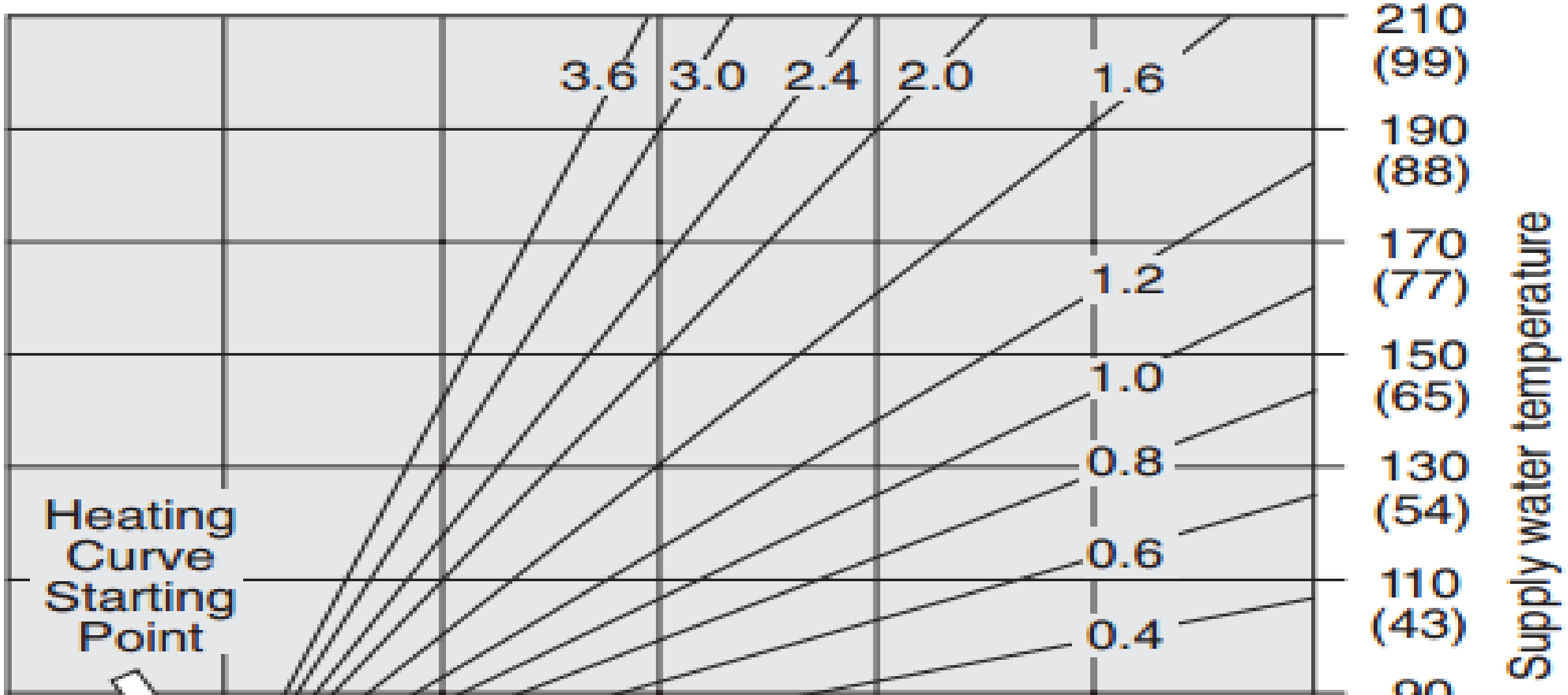

Boiler Protection

- Most hot water heating systems use standard, non-condensing boilers which must be operated above 140°F (60°C) in order to prevent the corrosion that is associated with flue gas condensation.
- Unfortunately, when the heating system is recovering from night setback or when it contains radiant floor heating, the heating system will often return relatively cool water to the boiler.

Boiler Protection cont.

- This cool boiler return water may cause the boiler to operate at such a low temperature that the flue gases condense. Alternatively, when the boiler surfaces are hot due to previous loads such as domestic hot water generation, the large temperature difference (ΔT) between the boiler and its return water can cause the boiler to become thermally shocked.
- Proper protection of the boiler under these circumstances requires a modulating mixing device can temporarily reduce the heating system load on the boiler. This is normally accomplished by closing a valve or reducing the speed of an injection pump.

System Protection

- Some systems, such as hydronic radiant floor heating, should have a limit to the supply water temperature in order to protect certain materials within the heating system.
- Floor heating systems and flat panel convectors should also limit the maximum surface temperature for occupant health reasons.

Variable Speed Injection

- In a hot water heating system, the full range of water temperatures required can be obtained through mixing some cool system return water with hot boiler supply water.
- Variable Speed Injection uses a pump to inject hot water from the boiler loop into the cool system loop. This pump is operated by an electronic control at different speeds in order to inject hot water at different rates.

Boiler Control Sensor

- With the addition of a boiler return sensor, the control can regulate the boiler return temperature as well as the system supply temperature.
- If the system supply water temperature approaches a maximum setting, the control can back off the speed of the injection pump in order to protect the system. The same also occurs when the boiler return water temperature approaches a minimum boiler setting.

Variable Speed Injection Schematic

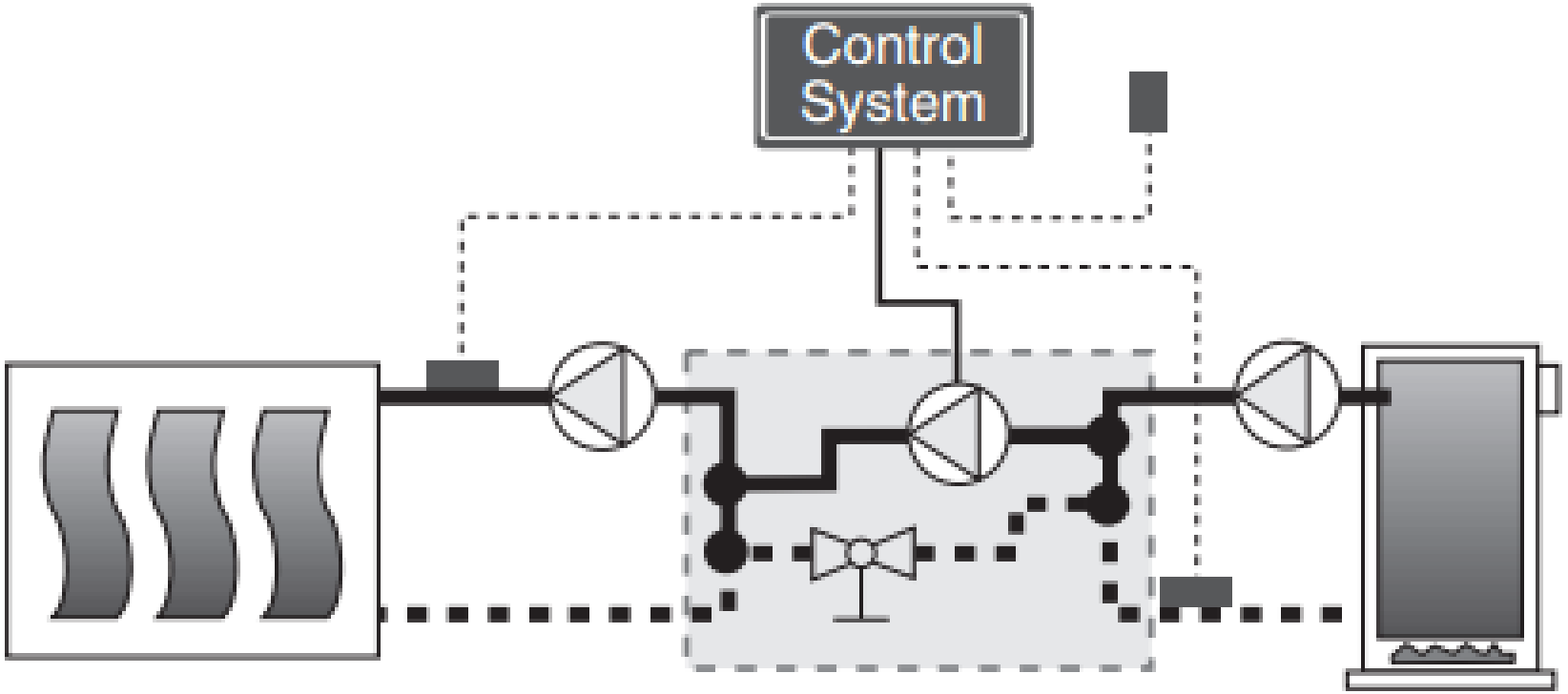

Outdoor Reset	Boiler Protection	System Protection
Yes	Yes	Yes

Limited Application

- Variable Speed Injection technology is compatible with the tekmar 406 House Control.
- However, it is limited in size to:
  - Less than 2.5 amp power usage
  - Less than ¼ horsepower motor

Variable Speed Injection System Piping

- Variable speed injection systems require complete isolation between the boiler loop and system loop. For example, when the injection pump is turned off, there must be no heat transfer from the boiler loop to the system loop. In order to avoid this unwanted heat transfer, standard primary-secondary piping techniques are used.
  - This piping arrangement requires that the injection piping be at least one pipe diameter smaller than the piping of the boiler and system loops.
  - There must be a maximum of 4 pipe diameters between the tees in the boiler and system loops in order to prevent ghost flow when the variable speed injection pump is off and either the boiler pump or system pump is on.
  - There must be at least 6 pipe diameters of straight pipe on either side of the tees in order to prevent the momentum of water in the boiler and system loops from pushing flow through the injection loop.
  - There should be a minimum 1 foot drop to create a thermal trap in order to prevent convective heat transfer through the injection loop.

Variable Speed Injection Piping Diagram

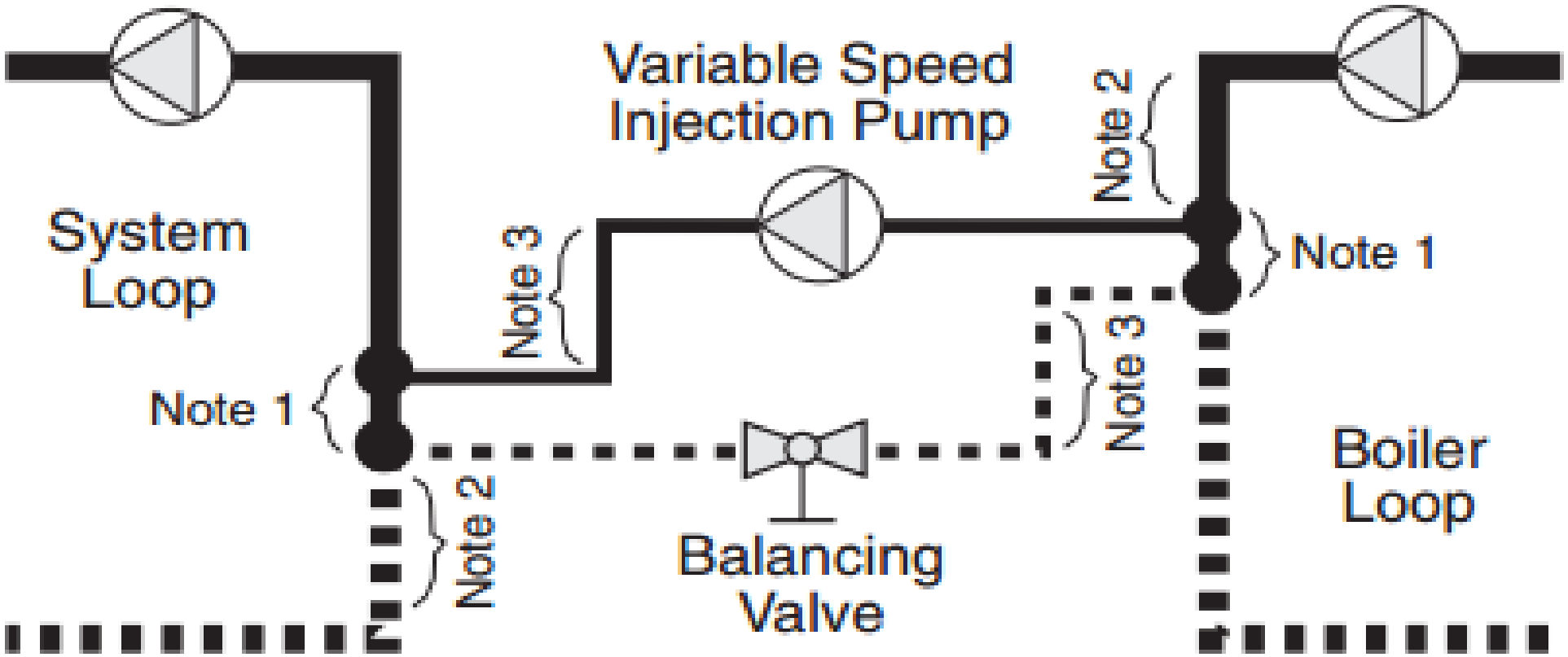

Heat Pump & Boiler System Schematic

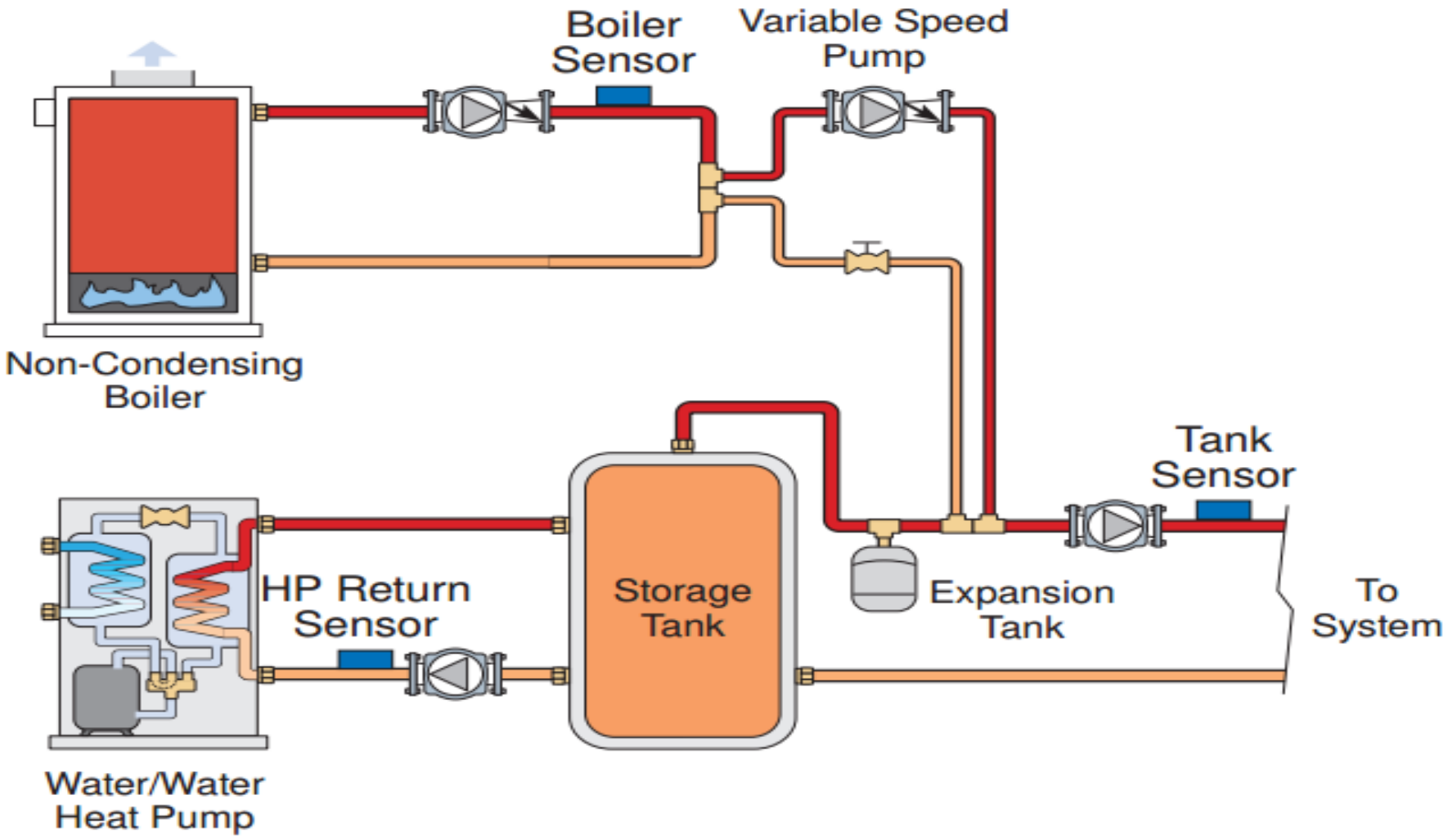

Variable Speed Injection Pump Panel

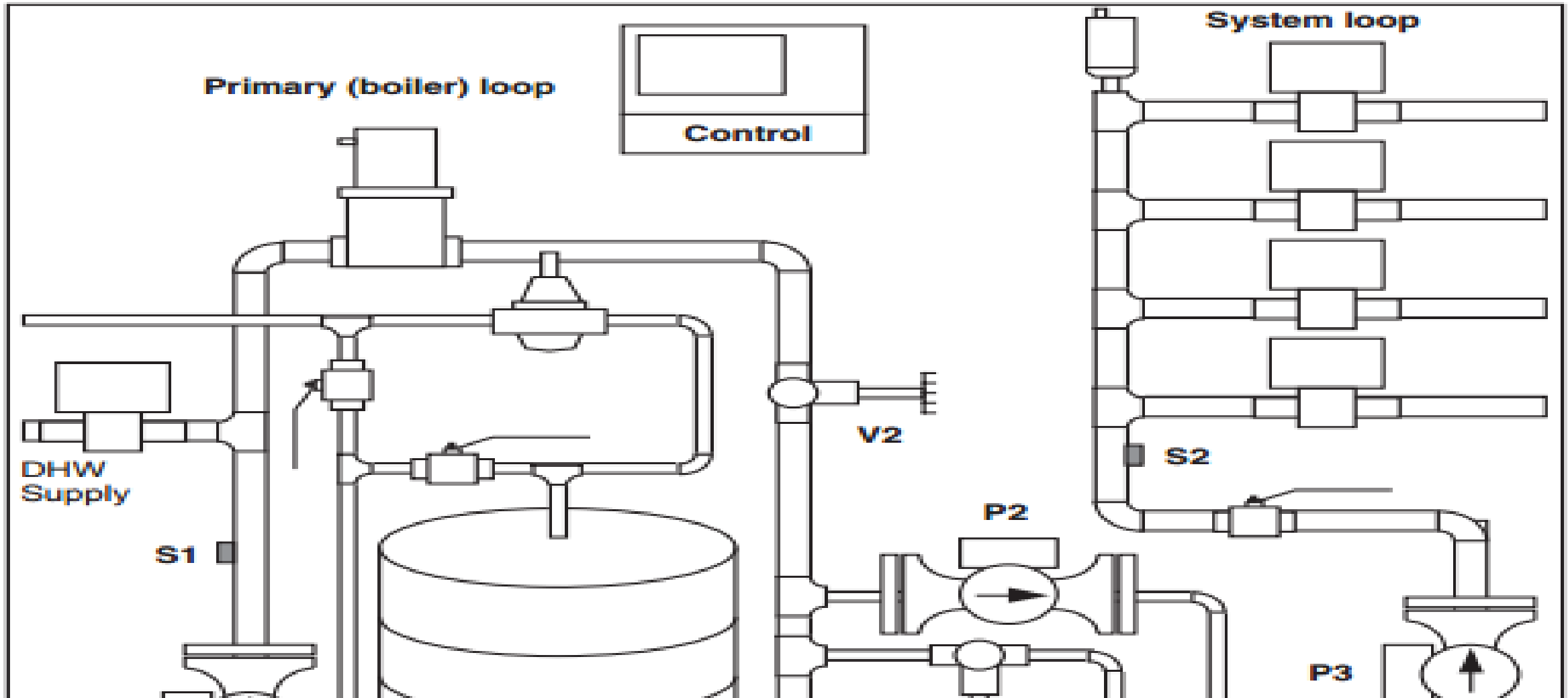

Radiant Floor Cooling Distribution Design

- The design requirements for efficient radiant floor heating and cooling are different, particularly in regards to sensible (air temperature) and latent (air moisture) cooling.
- Latent cooling or humidity can only be regulated through ventilation and forced air distribution systems (which can be coupled with ERVs for energy efficient structures).
- Hence, these differences need to be considered in the system design for provision of both radiant heating and cooling distribution systems.

Sensible & Latent Cooling

There are two types of cooling loads: sensible cooling & latent cooling.

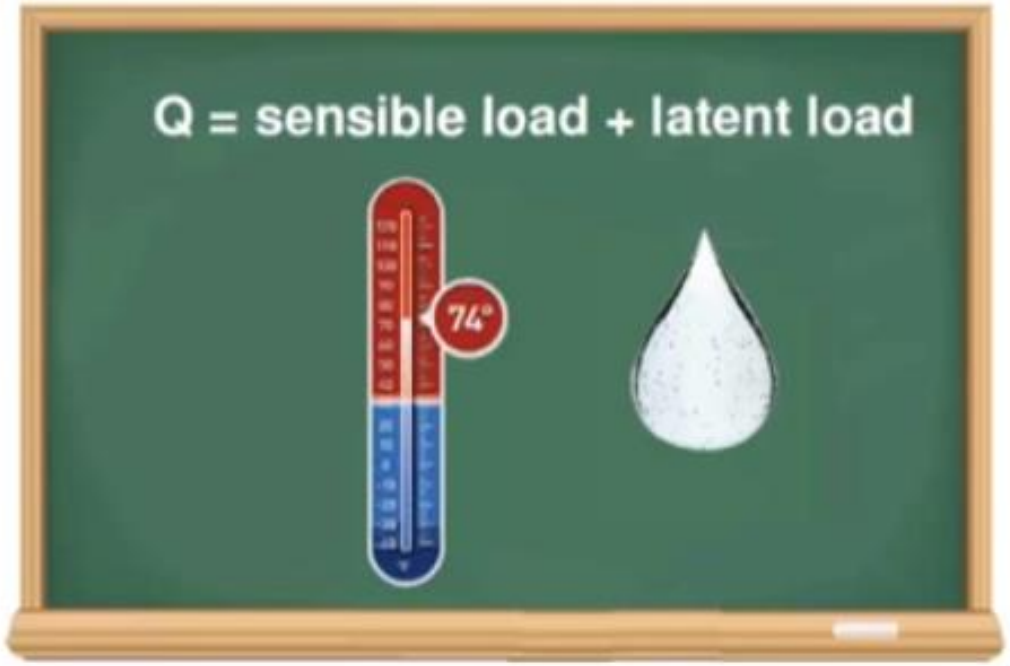

Cooling systems must be designed to remove both the sensible and latent cooling loads.

tekmar®

Latent Cooling Requires Ventilation & Forced Air

Radiant cooling can only address the sensible cooling load.
Latent cooling and ventilation require a forced air system

tekmar®

Seasonal Transitions

- As seasonal weather patterns occur, transitions from heating to cooling systems and vice versa can be achieved with mixing devices.
- However, once the weather requires more heating or cooling, the GSHP will be required to switch from a heating to cooling mode.
- This is accomplished via reversible GSHPs in which the buffer tank is primarily used for either cold or hot water storage.

Dedicated Hot Water Tank

- Desuperheaters and solar thermal collectors can provide hot water year round during either hot or cold water operation of the integrated GSHP system.
- Ideally, this would require separate insulated hot and cold water tanks used for intermediate storage.
- The hot water tank would be connected to the thermal solar collector, the desuperheater, and an on demand electric or natural gas hot water producer.

Switching from Heating to Cooling Modes for Seasonal Changes

Chilled water fan coils and radiant floors should never be designed with the same water temperature.

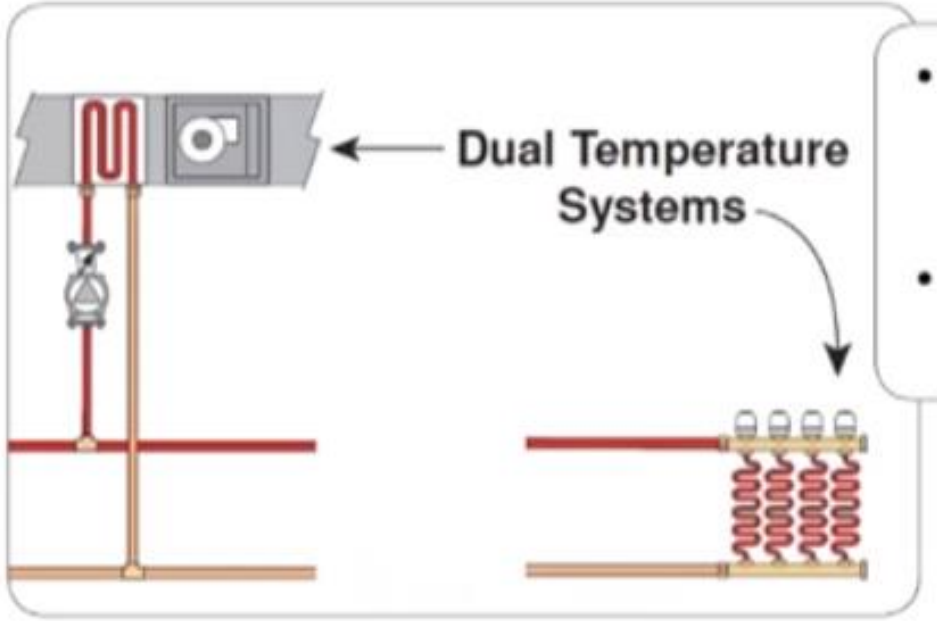

- Radiant floor supply temperature: 2°F above dew point temperature
- Fan coil supply temperature: minimum 45°F

tekmar®

Essential Zoning Controls

The control strategy is a critical part of the hydronic design. Zoning controls are necessary to properly create comfortable spaces that will:

- Efficiently switch between heating and cooling
- Satisfy air, floor and humidity setpoints
- Communicate with the system control

tekmar®

tekmarNet Thermostat 557

The tekmarNet® Thermostat 557 is the best solution for hydronic heat/cool applications with geothermal heat pump systems.

tekmar®

tekmarNet Thermostat 557
Single or Dual Stage Operation

Integrated 557 Thermostat
& 406 House Control GSHP System

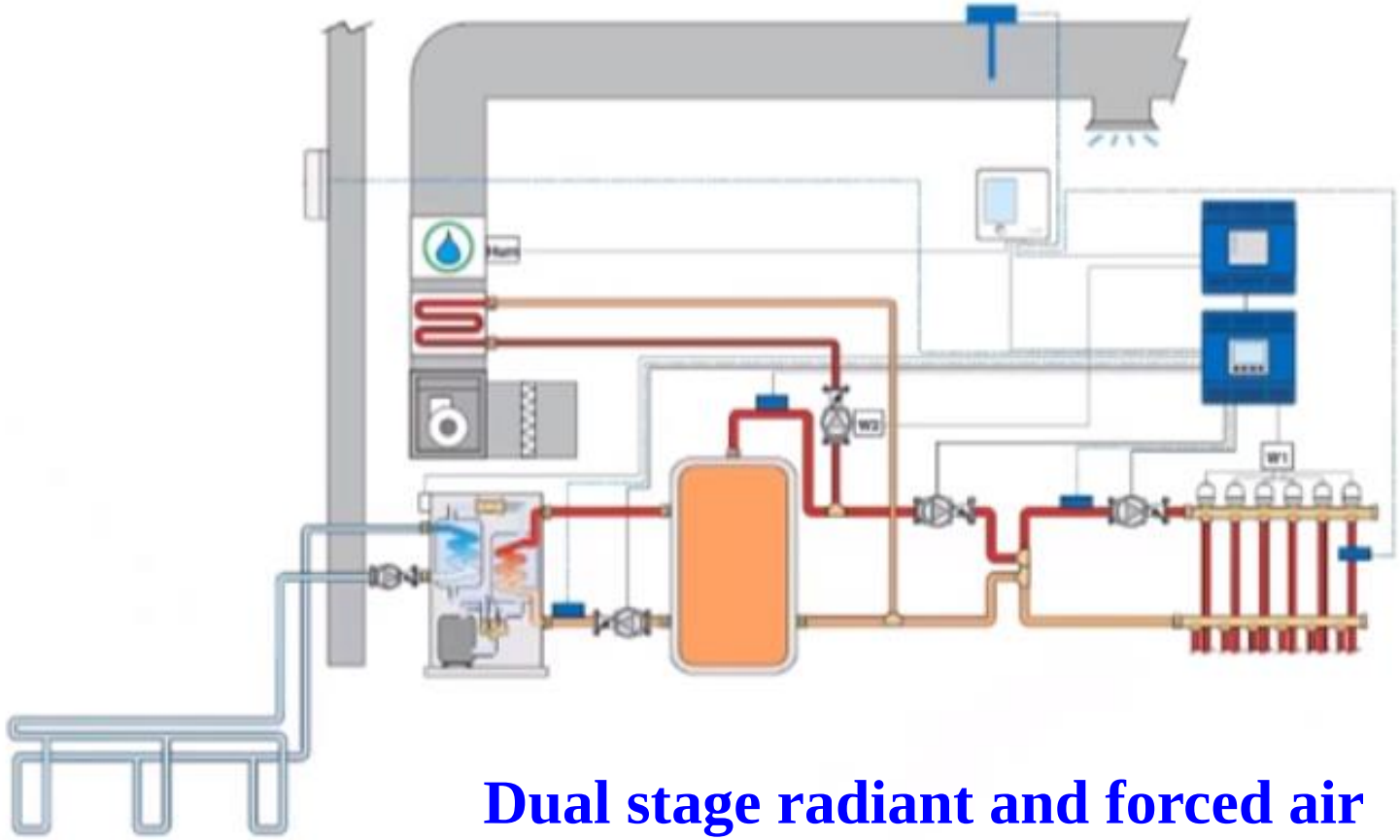

tekmar®

Dual stage radiant and forced air
Heating, cooling and ventilation system.

Radiant Concrete Structures

- Because of the storage capacity of concrete it is possible to generate cooling overnight and store it in the structure for use the next day.
- The heat exchange coefficient between the pipes and concrete is several orders of magnitude greater than that between the concrete and the air, so energy can be effectively stored and retained.
- This provides benefits in peak load shedding and also allows for the use of more passive chilled water generation.

Radiant Floors & Comfort

- The human body emits about 45% of its energy via radiation with the rest being convective and evaporative.
- Therefore most air conditioning systems fail to capitalize on the ability to use radiant heat transfer to improve comfort.
- Radiant floors and concrete thermal mass coupled with passive solar and active GSHP technologies allow for maximizing comfort of occupants.

Radiant & Forced Air Systems

- People choose radiant floor heating because it uses space wisely, temperature distribution is uniform and it is a low-temperature heating system.
- One advantage compared with air systems is that floor heating is a more efficient means of transporting energy.

Radiant Floor Cooling

- The demand for comfort, better building insulation, and greater internal loads from people and equipment have increased interest in installing a cooling system to keep indoor temperatures within the comfort range.
- This has resulted in the introduction of radiant floor systems for cooling.

Renewable Energy Sources

- Because radiant floor systems operate at a water temperature close to room temperature, they increase the efficiency of heat pumps, ground heat exchangers and other systems using renewable energy sources such as solar thermal, ground sourced passive cooling, and ground source heat pumps (GSHP).
- More than half the thermal energy emitted from a floor heating system is in the form of radiant heat.

Uniform Thermal Environment

- The radiant heat exchange directly influences the heat exchange with occupants and surrounding surfaces such as walls and ceilings.
- In this way, a uniform thermal environment is established.
- Because of the high radiant heat output and the fact that occupants are close to the floor surface, it’s an obvious choice to use the same floor system for cooling.

Convective Heat Exchange

- However, the convective heat exchange coefficient for floor cooling is much lower than it is for floor heating.
- Several comfort factors such as acceptable floor temperature, vertical air temperature difference, radiant asymmetry and dew-point temperature may reduce the cooling capacity of a floor system.

Radiant System Design

- The floor construction (slab thickness, floor covering) and system (type of pipes, distance between pipes, water flow rate, volume of thermal mass) may limit the cooling capacity.
- Therefore, the design of a floor system for highest cooling capacity may be different than for heating.
- Systemic approaches to radiant floor design require an adept understanding of radiant heating and cooling technologies, both advantages and disadvantages.

Optimal Comfort & Efficiency

- Requires an integrated radiant & forced air heating and cooling system.
- Solar thermal & geothermal heat pumps (GSHP) are efficient sources of hot and cold water for integrated HVAC systems.
- Though conventional homes may make this dual approach costly, energy efficient concrete homes with a relatively large volume of thermal mass and low HVAC requirements make it considerably more economical and appealing.

Energy Efficiency of Air vs. Water Transport

- For a given temperature rise, liquid water can absorb ~3,500 times more heat than the same volume of air, hence it is substantially more efficient than air as a means of transporting thermal energy.
- A 3/4 inch water pipe can move as much energy as an 18” diameter circular air duct or a 20” x 12” rectangular duct.
- Additionally, in terms of wattage usage, water pumps are 90% more efficient than fan motors for transporting thermal energy.
- Radiant systems also allow for establishing strategic living area set-points for further enhancing HVAC efficiency via zoning.

Density of Water vs. Air

Water is 832 times denser than air.

That means water can capture and channel more energy per unit volume than air.

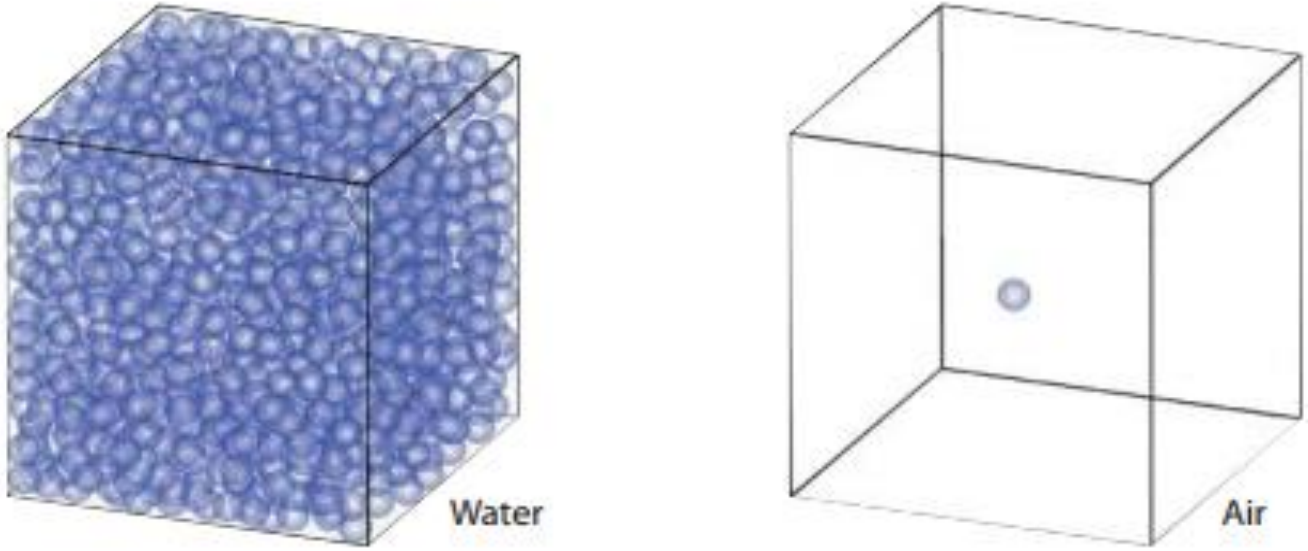

Source: Thermally Active Surfaces in Architecture, K.Moe, Princeton Architectural Press © 2010

Efficiency: Energy Consumption

Material	Specific Heat Btu/lb/°F	Density lb/ft³	Heat Capacity Btu/ft³/ °F
Water	1.00	62.4	62.4
Air	0.24	0.0074	0.018

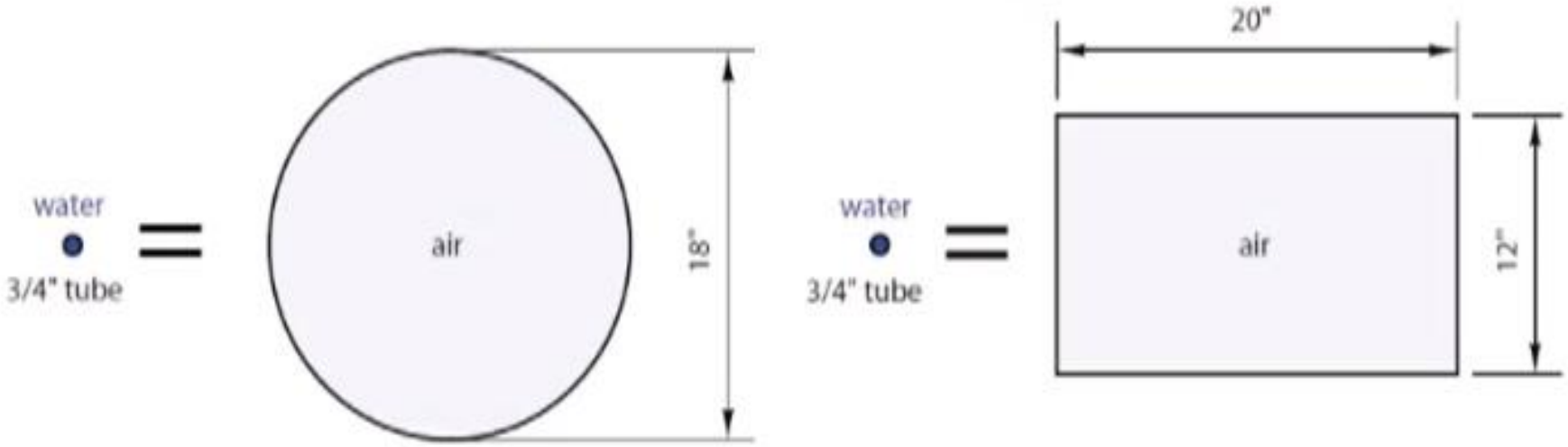

tekmar®

Minimizing Heat Gains

- An all electric input to a cooling distribution system ultimately becomes a heat gain to the building.
- Thus, when high energy efficiency is a primary design goal, it is imperative to minimize then electrical input power required to operate the cooling distribution system.
- Hydronic delivery options will typically provide significantly lower energy usage than a thermally equivalent “all air” system.
- Interestingly, a two stage hydronic and fan-coil heating and cooling system can reduce overall energy consumption by up to 50% compared to using only a forced air system.

50% Reduction in Energy Consumption

- Though water can store 3,500 times more thermal energy than air, the energy savings is not proportional in terms of HVAC efficiency.
- Water is about three times more efficient than air as a medium for heat transfer via HVAC systems.
- A conservative estimate calls for over-all energy savings of 15-20% compared to traditional forced-air systems.
- However, when radiant systems are integrated with forced air systems, these systems can use as little as 50% of the energy typically required for forced air alone.

Year Round Comfort via Radiant Heating & Cooling

- Radiant heating works by transferring heat through radiation from the floor surface to cooler objects in the room.

- Radiant cooling works by absorbing heat that is radiated from warmer objects in the room.

tekmar®

Radiant & Forced Air Systems

- Ideally, radiant systems are installed with a small but adequate forced air system due to the following:
  - Radiant heating cannot meet all of the heating needs of a structure.
  - Radiant cooling can only address the sensible cooling load, not the latent cooling system (only forced air systems and humidifiers can regulate humidity).
  - However, when integrated with radiant floor systems, forced air systems can be downsized substantially which makes this approach ideal for providing ultimate year round comfort and unprecedented energy efficiency, particularly for energy efficient homes.

Dew Point Temperature

- A limiting factor for the floor temperature and the cooling capacity is the dew-point temperature in the space.
- Some standards recommend a limit for the relative humidity in a space to 60% or 70% relative humidity, which at an air temperature of 26°C (79°F) corresponds to a dew point between 17°C and 20°C (63°F and 68°F).
- Others recommend an absolute humidity level of approximately 11.5 g/kg (80 gr/ lb), which corresponds to a dew point of 16°C (61°F).

Regulating Humidity & Cooling Capacity

- This means the floor surface temperature must be higher than 16°C to 20°C (63°F and 68°F).
- The use of dehumidification in a room by an air-conditioning system or a simple dehumidifier will decrease the dew-point temperature and then increase the cooling capacity of a floor system.

Hydronic Floor Cooling Capacity

- The important factors for the heating and cooling capacity of surface systems are the heat exchange coefficient between the surface and the room, the acceptable minimum and maximum surface temperatures based on comfort and consideration of the dew point in the space and heat transfer between the pipes and the surface.

Heat Exchange Coefficient

- The heat exchange coefficient depends on the position of the surface and the surface temperature in relation to the room temperature (heating or cooling).
- While the radiant heat exchange coefficient is for all cases approximately 5.5 $W/m^2 \cdot K$ (0.97 $Btu/h \cdot ft^2 \cdot °F$), the convective heat exchange coefficient will change.

Heat Exchange Coefficient Tables

	Total Heat Exchange Coefficient W/m²·K		Surface Temperature °C		Capacity W/m²	
	Heating	Cooling	Maximum	Minimum	Heating	Cooling
Floor	11	7	29	20	99	42
Wall	8	8	~40	17	160	72
Ceiling	6	11	~27	17	42	99

Table 1: Heat exchange coefficient, minimum and maximum recommended surface temperature and cooling and heating capacity.[2,8]

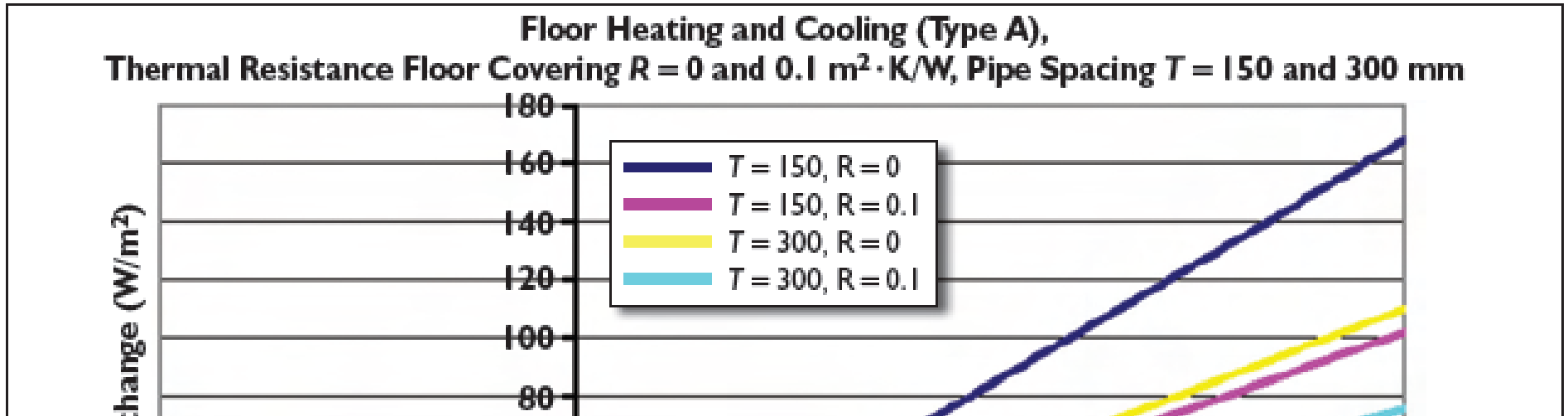

Surface Temperatures

- The listed maximum temperature for the wall is based on the pain limit for skin temperature, approximately 42°C (108°F), and the risk of being in contact with the wall over a longer period of time.
- The maximum temperature of the ceiling is based on the requirement to avoid temperature asymmetry.
- The minimum surface temperatures for wall and ceiling are based on consideration of the dew point and risk of condensation.

Floor Cooling & Solar Radiation

- A special case for floor cooling is when there is direct sun radiation on the floor. Then the cooling capacity of the floor may exceed 100 W/m^2 (32 $Btu/h \cdot ft^2$).
- This is also why floor cooling is increasingly used in spaces with large glass surfaces such as airports, atriums, and entrance halls.

Radiant System Costs

- Typically, radiant floor systems can cost $5-6 sqft to install, which is substantially more than forced air systems (home owners can install much of their own radiant flooring system and thus provide sweat equity which reduces costs to less than $0.50 sqft for ICF structures).
- However, in terms of comfort and energy efficiency radiant systems are advantageous, even for very energy efficient structures, particularly all ICF structures due to the density, conductivity and heat capacity of concrete and how this affects storage of thermal energy via thermal mass.

Integrated Radiant & Forced Air HVAC Systems

- When properly designed, radiant heating and cooling can be integrated with a small but adequate forced air system.
- For ICF structures, the additional costs can be minimized since the floors are constructed of concrete.
- Solar thermal and GSHPs can be included in the design, providing unsurpassed energy efficiency, comfort, and redundancy with an acceptable ROI.

Radiant System Cost vs. Benefits

Why Choose Radiant Heating and Cooling?

•Efficiency •Comfort •Demand

tekmar®

Thermal Comfort

Radiant heating and cooling increases environmental thermal comfort based on ASHRAE Standard 55-2010:

- radiant temperature
- air temperature
- humidity
- air velocity

tekmar®

Thermal Comfort: Operative Temperature

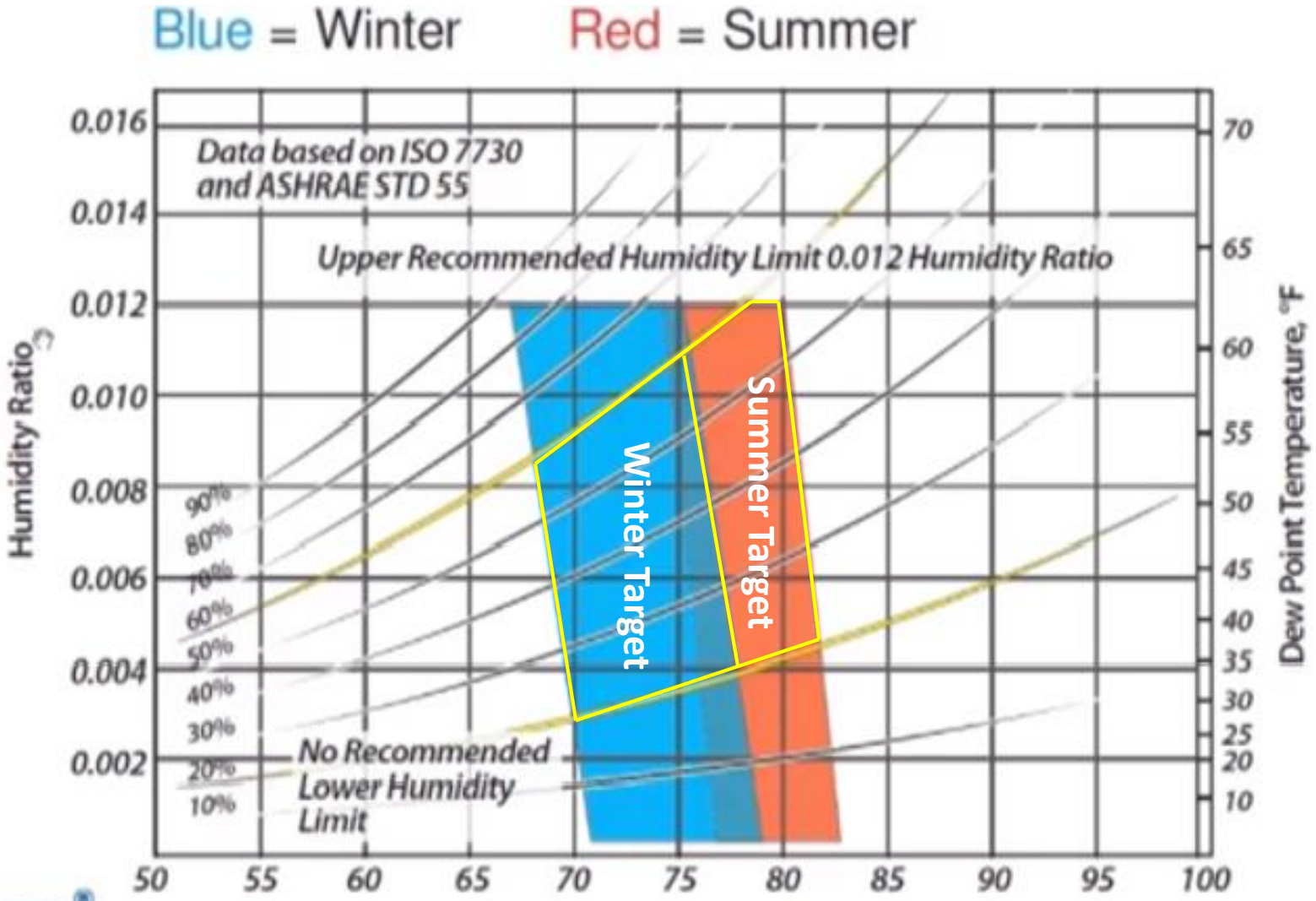

Thermostat Controls

- Radiant floor heating and cooling allows for maintaining comfort while decreasing thermostat temperature and reducing energy consumption.
- This is due largely to controlling sensible vs. latent energy, e.g., regulating humidity and dew point in conjunction with temperature via state-of-the-art thermostat controls and benefitting from thermal mass of concrete.

Operative Temperature

Operative temperature is the average of room temperature and the mean radiant temperature.

Operative Temperature

$$= \frac{\text{Air Temp} + \text{Radiant Temp}}{2}$$

$$= \frac{(68°F + 80°F)}{2}$$

$$= 74°F$$

Low Air Velocities

- For low air velocities (<0.2 m/s [0.66 fps]), the operative temperature can be approximated with the simple average of air and mean radiant temperature.
- This means that the air temperature and the mean radiant temperature are equally important for the level of thermal comfort in a conditioned space.

Occupant Comfort

- The operative temperature is analogous to the comfort temperature that the human body actually feels.
- At an equivalent operative temperature a radiant concrete structure system can have a mean air temperature one or more degrees higher than an all air system and deliver similar or better comfort levels.

Radiant Temperature

- For an ICF structure this would include the temperature of the thermal mass of the concrete floors and the concrete walls and ceiling, and concrete countertops in the kitchen and bathrooms.
- An all ICF structure can increase thermal mass by a factor of ~5 in comparison with only a concrete floor/slab (in conjunction with high performance windows and doors this can have a substantial effect on radiant temperature, thermal comfort, and energy efficiency of a structure).

Thermal Flywheel Effect

- Because of its radiant heat transfer a concrete structure is able to respond to changes in load very quickly.
- However due to its relatively low capacity, space temperature changes are achieved more slowly. This is effectively a thermal flywheel effect where temperature fluctuations are limited and cooling capacity spread over a longer period.
- Concrete structures are effectively self zoning, requiring fewer control zones with forced air systems and/or natural ventilation used for fine tuning.

Controls for Concrete Structures

- Controls for concrete structures are typically very simple with only on/off two port valves for each piping control zone.
- Temperature control for the concrete can be either a constant concrete temperature set-point based on external temperature, or a more complex arrangement that references room temperature.
- Cut offs based on room dew point temperature for condensation control can be employed. It appears, however, that concrete structures can be more forgiving for condensation due to the relatively high surface temperatures and its ability to re-evaporate moisture.

Dynamic Thermal Analysis

- The successful design of an ICF/concrete structural and thermal mass system requires the use of dynamic thermal analysis.
- In particular, the software tools used require the ability to accurately model the heat exchange and storage characteristics of the embedded pipework and the concrete structure.

Thermal Comfort: Temperature Profile

The temperature profile for forced air systems is variable, and causes stratification.

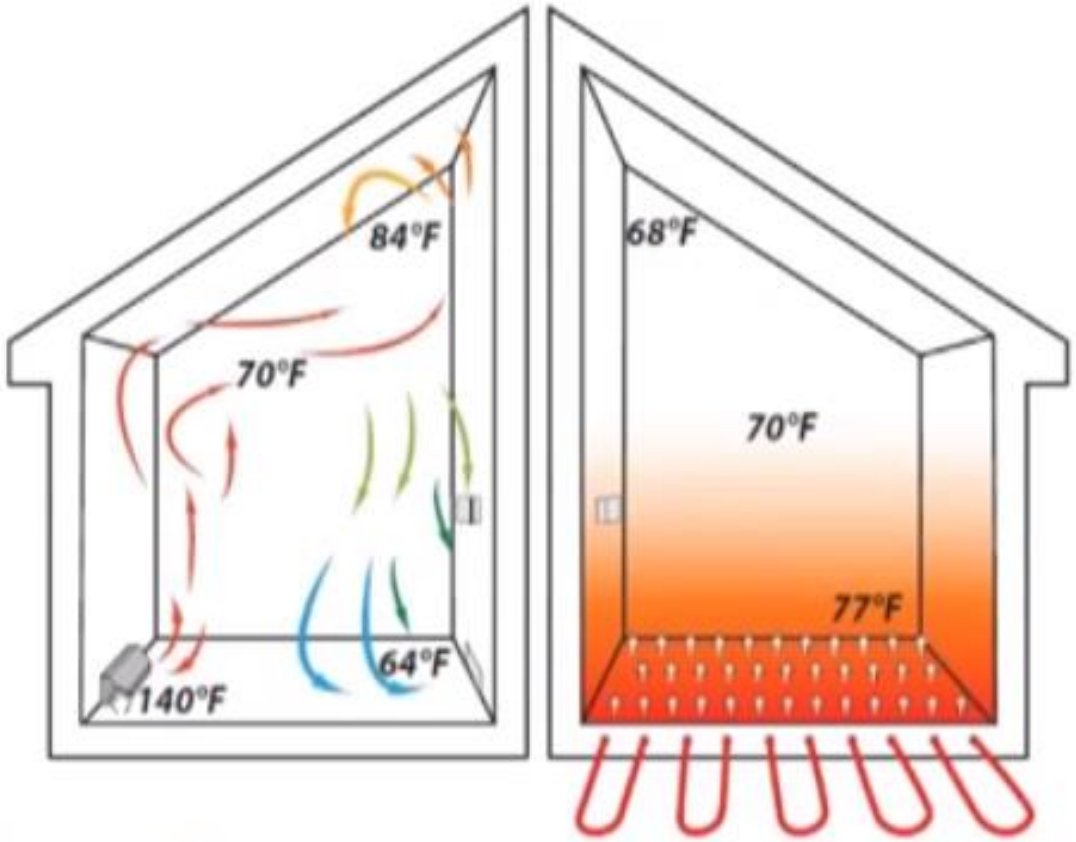

- Radiant systems offer a stable temperature profile
- Less heat loss at ceiling
- Effective space conditioning

tekmar®

Radiant System Challenges

The challenges of radiant heating and cooling are:

- Passive solar gain
- High thermal mass
- Capacity of the heating / cooling source
- Heating & cooling interlock
- Humidity control

tekmar®

Myths of Radiant Cooling

The myths of radiant cooling that have affected its marketability include:

- capacity
- condensation
- cold floors
- only suitable in dry climates

These myths exist due primarily to poorly designed radiant systems, inadequate controls & improper operation.

tekmar®

Myth of Radiant Cooling Capacity

- Floor cooling capacity typically 7 to 14 Btu/hr/ft^2
- Up to 32 Btu/hr/ft^2 may be observed in areas of high solar gain

tekmar®

The Myth of Condensation

A well controlled radiant system will never experience condensation.

The key is to ensure that the supply temperature is always above the dew point temperature of the room.

tekmar®

Avoiding Condensation

- Maintaining the supply temperature at least 2 °F above dew point will avoid condensation.
- This can be accomplished through:
  - Proper system design including accurate accounting of cooling capacity
  - Proper installation
  - Proper control including measuring relative humidity and ability for thermostat controls to activate dew point reset

The Myth of Climate

Radiant cooling can be effective in all climates, particularly at reducing the sensible cooling load and removing solar gains.

tekmar®

Radiant cooling successfully installed at this Bangkok Airport in a very humid environment with substantial glazing.

Radiant System Operation

What is needed to make a radiant heat/cool system operate as intended and meet customer expectations?

tekmar®

Integrated HVAC System

A combined air & hydronic system for optimum comfort and efficiency.

tekmar®

Humidity Sensors

The control system MUST use humidity sensors to monitor dew point temperature.

tekmar®

Dew Point Reset

Relative humidity must be measured to calculate the dew point temperature and avoid condensation for radiant cooling applications.

tekmar®

Water to Water vs. Water to Air

- Typically, ground or water source heat pumps are most efficient when used in water to water applications such as radiant heating and cooling.
- However, radiant systems, particularly cooling, are not extremely efficient when utilized with wood flooring or carpeting.

Temperature Overshoot

- In a home with a tight envelope and a very small heating load, even a small amount of heat can cause overheating, and the thermal mass in a radiant floor system (especially with concrete-slab systems) increases the risk of overheating.
- This is particularly true in buildings with some level of passive solar gain—the radiant floor may still be delivering heat even after solar gain raises the air temperature.

GSHPs & Hydronic Systems

- Geothermal radiant systems are best suited to combat this since the systems are more efficient at generating heat at lower water temps.
- Outdoor Reset can be used so the tank temperature will be based on the outdoor temperature to avoid overheating.

Maintaining Slab Temperature

- When the heating load is very small, the radiant slab/concrete structure has to be maintained at no more than a few degrees above room temperature to prevent overheating, and this means that the slab isn’t likely to be warm to the touch.
- A concrete structure maintained at 74°F (23°C) will be cooler than an occupant’s skin, so bare feet will conduct heat into the slab.

Radiant Floor Warm Weather Shut Down

- To keep the level of heat input proportional to the actual needs of the space (keeping in mind solar gains), there are programming options available, including scheduling floor minimum temperatures, using setback, and a tekmar feature called Radiant Floor Warm Weather Shut Down.
- The latter will hold off the radiant installation until the outdoor temperature is sufficiently low, to avoid overheating in the afternoons during the shoulder seasons.

Strategic Glazing & Structural Design

- In buildings that experience solar gain, radiant floor cooling is the most efficient option, as it will remove the heat from the floors before it has a chance to heat the air.
- However, strategic glazing, leveraging thermal mass, proper system design, state-of-the-art controls, and cool air mixing via ventilation and fresh air intake can eliminate excessive solar heat gain for energy efficient and Net Zero Energy homes.

Indoor Temperature Feedback

- Another benefit to modern controls is Indoor Temperature Feedback, whereby thermostats communicate with the master control to provide ACTUAL heating or cooling needs.
- This prevents needless overheating or cooling, and allows the control to respond to unexpected environmental gains or losses.

Temperature of Radiant Floors

- Radiant floors are not usually warm to the touch, they typically feel neutral (with the exception of slab warming in bathrooms).
- A neutral colored floor can add a lot of heat to the room through radiation, as it is still warmer than the ambient air.
- Floors that are warm to the touch, bathrooms aside, are typically seen on cold days in buildings where the heat loss is appreciable

Expense of Radiant Systems

- Expense can be an issue with radiant installations, but there are design options that can reduce these costs (for example, a heat exchanger off a highly efficient water heater).
- As for energy savings, it is undeniable that water transfers much more energy than air.
- Thus, the energy required to operate a blower fan vs. a hydronic pump is much higher.

Ground-Source Forced Air Heat Pump

- For homes that use wood floors, carpet, and solar passive design, integration of forced air delivery to ground-source heat pumps provide the best heating and cooling options.
- Though some energy efficiency may be lost due to water to air conversion, the installation of ducts is less expensive than installing radiant floor systems.

Radiant Floor Heating & Cooling

- Radiant heat is distributed over a large surface area, so it is delivered at a relatively low temperature.
- It’s uniform, and it warms people directly, rather than having to heat the air. This means that radiant heat can provide comfort at a lower air temperature than is required with forced-warm-air or baseboard hot water heat.
- You might be able to keep your thermostat lower—say 65 degrees—and be perfectly comfortable with radiant-floor heating, while 68 or even 70 degrees would be required with other systems.

Pros of Radiant Floors

- Most people with radiant-floor heating absolutely love the warmth underfoot; you can walk around barefoot even in the middle of winter.
- If we're used to drafty old houses, there's nothing nicer than a floor that's warm underfoot and gently radiates heat upward.
- Radiant heat also tends to have less of a drying effect than does forced-air heat. And because there aren't baseboard radiators, furniture can fit right up against the wall.

Disadvantages of Radiant Flooring

- There are two primary concerns:
  - Overheating – overshooting set-points for passive house design, e.g. very tight envelopes with super-insulation
  - Economics (primarily labor for installation of pex tubing which can run $5-6 sqft)
  - Doesn’t work well with carpets due to the insulating effect that carpet padding has on radiant flooring.

Radiant Floor Overheating

- First, in a highly insulated house (at least R-40 walls, an R-50 ceiling, and triple-glazed low-e windows), such a tiny amount of supplemental heat is needed that a radiant floor needs to be kept no more than a few degrees above the air temperature—or else overheating will occur.
- If a concrete-slab or tile floor surface is maintained at 72 or 75 degrees, it will likely feel cool underfoot—since it’s at a lower temperature than your feet. So you may not get that delightful benefit of a warm floor surface.
- If you’re delivering heat to the floor during the nighttime, and then have significant passive solar gain during the daytime, overheating is likely to occur.

Radiant Floor Controls

- Teckmar thermostats use Pulse Width Modulation and Indoor Temperature Feedback technology to periodically pulse the floor with the right water temperature so that the floor maintains a steady constant temperature, thereby maintaining optimal comfort.
- Their thermostats also include the option to install a floor temperature sensor. The sensor is used to provide the following options:

Hardwood Floor Temperature

- Hardwood floor temperature limiting. Hardwood floors can dry out and suffer damage due to thermal expansion. tekmar thermostats allow a maximum floor temperature to be set. Many hardwood flooring companies specify a maximum temperature of 85ºF (30ºC).
- Maintain a minimum floor temperature. This is especially useful in bathrooms. By maintaining the floor between 80 to 85ºF (25 to 30ºC), the floor feels warm to the touch.

Wood Flooring for Radiant Floors

- An exception is vertical clear grain (VCG) Douglass fir planks that come in 4” or less widths which adapt more easily to the gradual temperature changes from radiant heating. The narrower width boards expand and contract less. And there are more seams in the flooring which allow for additional movement along the boards.
- Another important factor is having vertical grained wood or “quarter sawn” lumber. Wood cut into the grain – called radial grain – offers better stability. The vertical grain allows the wood to expand vertically rather than across the length of the board. That’s why clear vertical grain Douglas fir flooring is a saving grace in this application.

Floating Engineered Wood Flooring

- The best type of wood flooring construction to use is a "Floating" Engineered Floor**.** One of the benefits of using a floating floor is that the floor boards are locked together at the joints of each board (not nailed, adhered or attached to the subfloor in any way). This allows the whole floor to move as a single unit if a dimensional change (expansion or contraction) within the wood floor takes place.
- In addition, an engineered floor with cross layers of plywood backing makes for a more stable floor with less chance of dimensional movement than a solid wood floor. Floating engineered wood flooring can be installed over most all subfloors and surfaces (except carpet) as long as they are flat and secure. Using a floating floor will drastically reduce any possible seam contraction (opening of joints) between the floorboards.

Avoiding Overheating

- Maintain comfort in rooms with large amounts of southern facing glass windows.
- These rooms are often overheated during the day by solar gain through the windows. Typically this could result in the radiant floor going cold during the day.
- By maintaining the floor near the desired room air temperature, the room remains comfortable, even when the sun sets in the evening.

Dew Point Control Set-Points

- Programmable eZEio Controllers as well as teckmar controls allow for controlling the set-point to regulate the dew-point and avoid condensation.
- This allows for provision of radiant cooling in addition to radiant heating.

Programmable Setback Schedule

- In order to provide energy savings, tekmar thermostats also include the option to provide a programmable night setback schedule.
- The thermostat reduces the temperature during the night, thereby providing energy savings.
- The thermostats can then use the Optimum Start feature together with Indoor Temperature Feedback, to ensure the room and floor settings are back up to temperature when you wake up in the morning.

Remote Internet Access

- tekmar has solutions for boiler control, zoning, operation of cooling systems, and remote internet access options for radiant floor heating systems.
- These system controls may be integrated with the solar thermal and ERV/GSHP forced air delivery system in addition to controlling the radiant floor system.

Radiant Floor System Design

- A floor heating system is often designed with a tube spacing of 150 mm (6 in.) or more.
- However, to increase the cooling capacity, it may be necessary to design a floor cooling system with either larger tubing or closer spacing.
- A water flow rate in a floor heating system often is based on a water temperature difference of 10°C (18°F) between supply and return.

Radiant Floor Tube Sizing & System Design

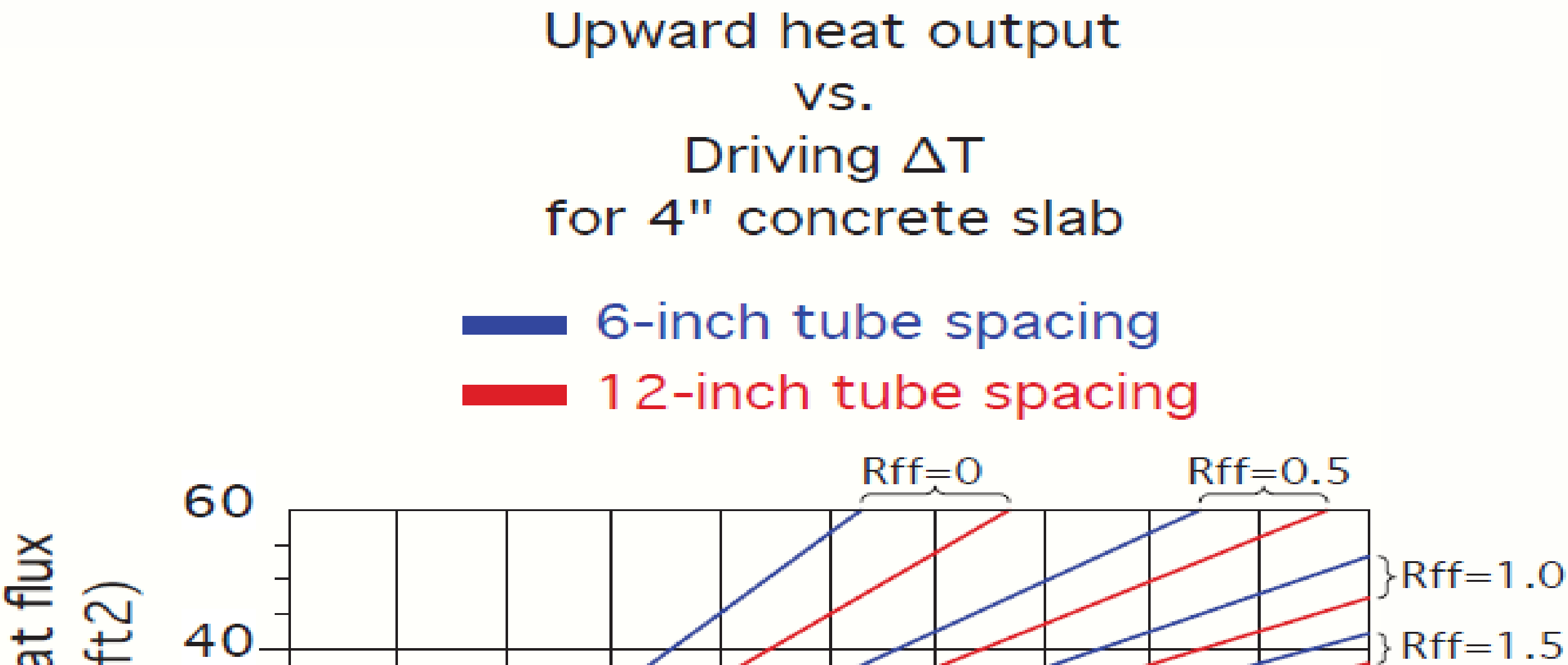

Cooling System Requirements

- Again, to increase the cooling capacity and avoid excessively low supply temperatures (condensation risk), a floor cooling system should be designed with a 3°C to 5°C (5°F to 9°F) temperature difference between supply and return water. This means a higher water flow rate and a higher pressure drop in the tubes.
- It may be necessary to use a larger circulation pump or to use a shorter tube circuit, but will still obtain enough flow rate to establish a turbulent flow.
- For maximum cooling capacity (and for highest system/plant efficiency), it is important to avoid floor coverings with a high thermal resistance such as heavy wall-to-wall carpets.

Radiant System Control

- Even if surface heating and cooling systems often have a higher thermal mass than other heating/cooling systems, they do have a high control performance.
- The smaller temperature change is partly due to the small temperature difference between the room and the system (water, surface) and the resulting high degree of self-control.
- Studies on controllability of floor heating/cooling show that floor heating controls the room temperature as well as radiators.
- To avoid condensation on a cooled surface, there is a need to include a limitation on water temperature, based on the space dew-point temperature.

Integrated Control Concept

- A control concept for a combined floor heating-cooling system is shown in the following figure.
- For heating supply water temperature, the average value of the supply and return water temperature is controlled according to the outside temperature (flux control according to a preset heating curve).
- In addition, an individual room thermostat may control the water flow rate to each room. This will typically be an on-off control.

Integrated Control Diagram

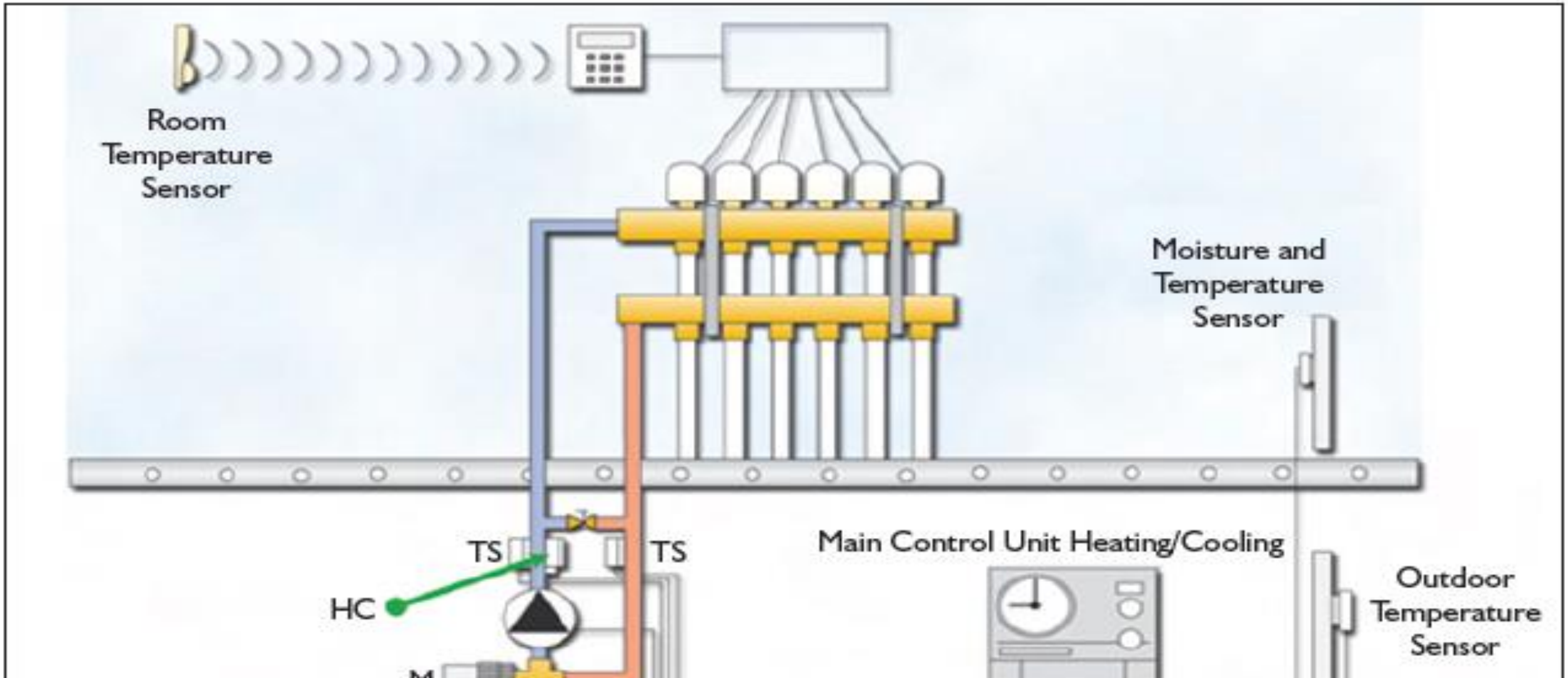

Radiant System Zoning

- For floor cooling the supply water temperature or the average value of the supply and return water temperature is also controlled according to the outside temperature (flux control according to a preset cooling curve) with a limiter based on the dew-point temperature in a reference room.
- In addition, an individual room control may be set to shut-off or open the water flow to each room.

Heating & Cooling Curve

- The heating and cooling curve provides the relation between floor system water temperature and outside temperature.
- This curve will depend on internal loads, type of building, and external climate.
- In the control concept shown in Figure 3, the three-way valves ensure that the return water is going back to the chiller, when in cooling mode, and back to the heater, when in heating mode.

Radiant Cooling Source

- As a floor system is a high-temperature cooling system, and a low-temperature heating system it provides the high efficiency of a heat pump.
- This can be an air/water, water/water, ground/water type or an absorption heat pump.
- As the ground temperature often is around 10 °C, with a properly designed geoexchange, GSHP, and distribution system, it is possible to cool a floor directly from a ground heat exchanger without the use of a heat pump.

Integrated HVAC System

- A floor cooling system may often be used together with a convective cooling system. Then, the floor system may take most of the sensible load, while the air system will take care of the latent load.
- At the same time, the dew point in the space will be lowered, and a higher cooling capacity of the floor system may be obtained.
- Another advantage is the high return water temperature from a floor system, 18°C to 20°C (64°F to 68°F), which will increase the efficiency of a chiller designed with a higher evaporator temperature.

Radiant Floor Cooling Applications

- Floor cooling can be applied almost everywhere floor heating is applied (single-family homes, multifamily homes, offices, industrial buildings (hangars, storage spaces, large halls, etc.), museums, sports facilities, churches, etc. The system types are the same.
- Floor cooling is particularly efficient in large spaces with large windows where you can expect a significant influence of sun radiation either directly or due to a warm ceiling or wall surface (atria, airports, shopping malls, etc.). Floor cooling absorbs the sun radiation before it heats the space.

Bangkok, Thailand Airport

- The world’s largest construction with floor cooling is the new airport in Bangkok, Thailand.
- Some 150,000 m^2 (1.6 million ft^2) of floor cooling is installed in the concourses and main terminal buildings.
- The roof over the concourses (*Figures 4* and *5*) consists of glass and a plastic membrane construction.

Bangkok, Thailand Airport

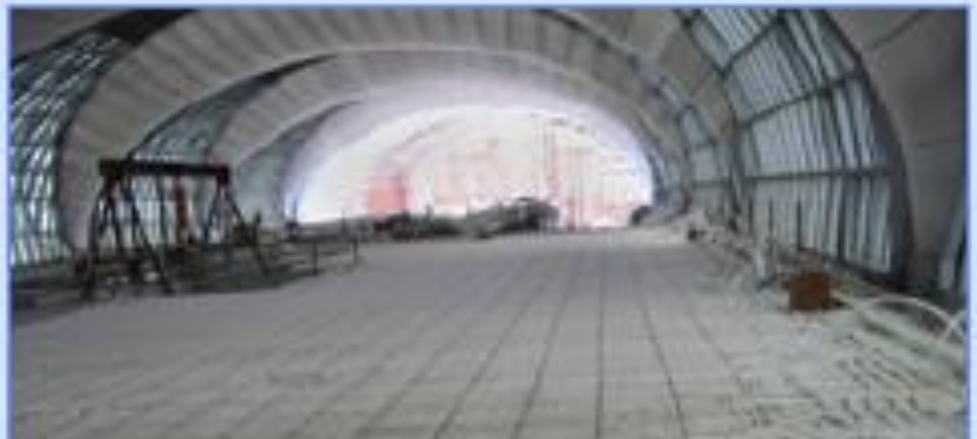

Displacement Ventilation & Radiant Floor Cooling

- Due to the high outside temperatures and sun radiation, this results in a high cooling load. A combination of displacement ventilation and floor cooling were installed.
- The floor cooling was dimensioned to remove 70 W/m^2 to 80 W/m^2 (22 $Btu/h \cdot ft^2$ to 25 $Btu/h \cdot ft^2$) with a supply water temperature of 13°C (55°F), return water 19°C (66°F) and a floor surface temperature of 21°C (70°F).

Bangkok, Thailand Airport Design Concept

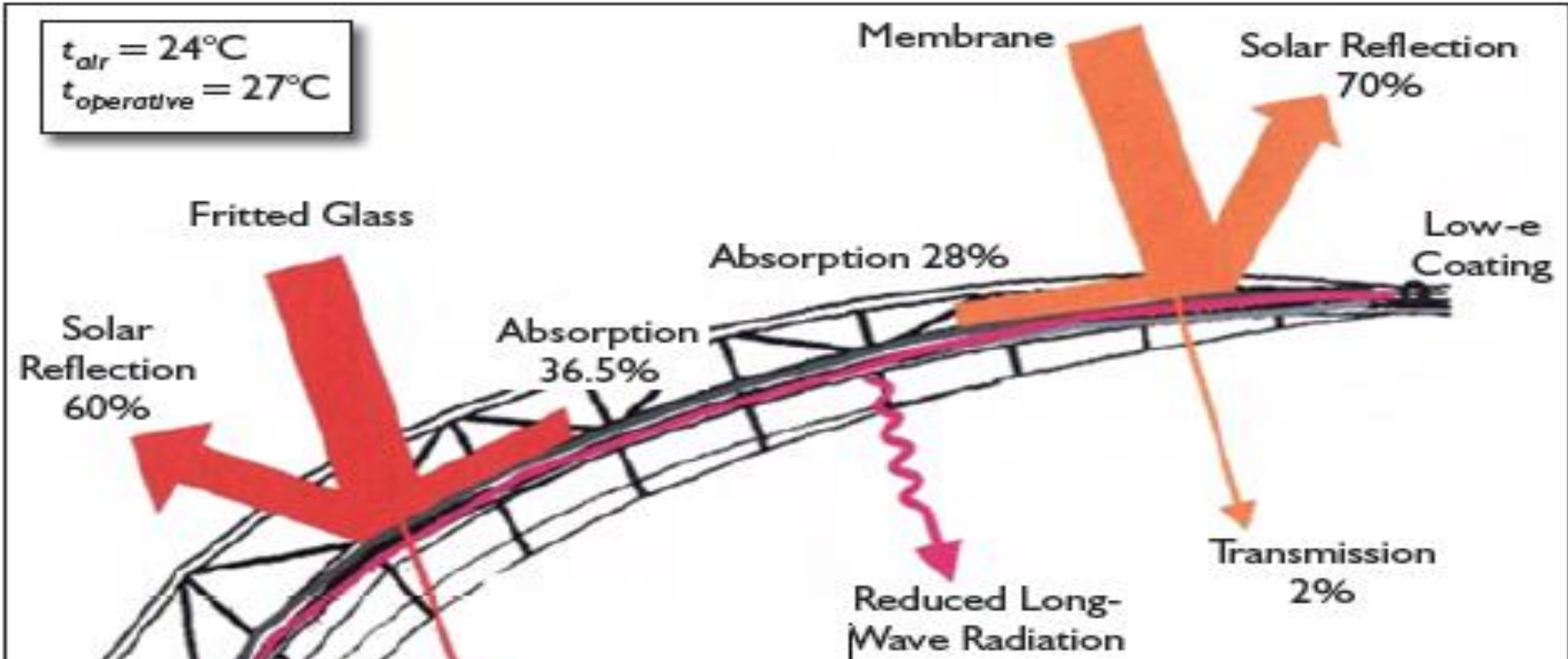

30% Decrease in Commercial Energy Consumption

- The manifolds for the floor system were installed inside the displacement air diffusers. As the dew point in the supply air is 10°C (50°F) and lower than the supply water temperature, there is no risk for condensation on the pipes.
- The design dew point in the space was 16°C (61°F) due to evaporation from the occupants. This is still 5°C (9°F) lower than the surface temperature of the chilled floor.
- Compared to a full air system a 30% reduction of energy consumption was predicted during the design.

15-50% Decrease in Residential Energy Consumption

- Research conducted by Oak Ridge National Laboratory (ORNL) on a home in California showed that a conventional forced-air cooling system coupled with radiant floor precooling consumed about half the energy of the forced-air system alone.
- Another source suggests that homes in New Mexico with radiant floor cooling will conservatively save 15% to 20% compared with typical forced-air systems.

Radiant Cooling Factors

- The energy savings of a radiant floor cooling system will depend heavily on what type of water chilling system is used, what additional cooling, dehumidification, and/or ventilation system is installed, and how the systems are operated.

Indirect Evaporative Cooled Radiant Floor System

- One energy-efficient approach combines an indirect-direct evaporative cooler (already an energy-efficient cooling option in dryer climates) with a radiant cooling option.
- Evaporatively cooled water, without any active refrigeration, is used directly to cool the floor.
- In this system, floor condensation is inherently avoided because the cooling capacity of the evaporative cooler declines as the outside relative humidity rises.

(Weil, M. 2004. "Radiant for all seasons." *Contracting Business* 61(4). http://tinyurl.com/weil2004)

Strategic Environmental Design

- A key to simplifying radiant cooling is to strategically design the radiant cooling system within the building envelope.
- The perimeter solar gains and thermal transmission loads must be reduced to as low as possible to allow the radiant cooling system to operate properly.
- Radiant cooling capacity is limited by the cooling surface temperature being just above the dew
- point of the ambient air in the space to be cooled. This means that the minimum effective temperature of the radiant cooling surface in most building applications is around 61-65°F to avoid condensation.

ASHRAE Design Temperatures

- In arid Santa Fe, the ASHRAE design temperature is 64°F in summer. If liquid temperatures within the tubing are above that, there are no condensation issues.
- As stated in a number of occupant comfort studies, the human comfort factors are generally made up of 50% radiation, 30% convection, and 20% evaporation.
- According to Maze, in North America, many mechanical engineers are very concerned with air temperature control and the use of all-air-type air conditioning systems — the radiant comfort part of the equation is more or less ignored.

Energy-Neutral Air System

- Once the building interior is maintained at a constant temperature, and the transient heat gains around the perimeter have been nearly eliminated, there is very little need for any temperature-compensating controls.
- The air system just needs to supply outdoor air for ventilation, and does not need to do any space temperature control.
- This ventilation air can be supplied at near room temperature via a displacement ventilation system. An air-to-air heat exchanger such as an ERV can provide a virtually energy-neutral air system.

Evaporative Cooled Radiant Systems

- The energy efficiency of these systems becomes even more appealing in areas where the night temperatures are regularly below 59°F during the summers.
- This allows a fluid (evaporative) cooler to be used exclusively for heat rejection similar to an earth tube or horizontal field loops also used for GSHPs.
- Climates where the relative humidity is high throughout the summers may require dehumidification equipment for the ventilation supply air system, which would impact the capital and operating costs.

Radiant Floor Cooling Summary

- A hydronic floor cooling system provides sensible cooling without noise, draft, obstacles, or the need for cleaning.
- The maximum cooling capacity for most spaces is less than 50 W/m^2 (16 $Btu/h \cdot ft^2$). In spaces where the sun shines directly on the floor (atrium, entrance hall, showroom), the cooling capacity is significantly higher—up to 100 W/m^2 (32 $Btu/h \cdot ft^2$).
- A floor cooling system must be controlled to avoid condensation. This may be done by a supply water temperature that is controlled by the dew-point temperature.

Radiant Floor Installation Costs

- Radiant-floor heating systems, with tubing embedded in a concrete slab, multiple pumps for different zones, and sophisticated controls, will easily cost $10,000.
- Those funds could be better spent on HP windows, more insulation, and so forth—then recoup some of that extra cost by spending less on the heating system.
- Homes built to the rigorous Passive House or NZE home standards can be heated with a combination of solar thermal, passive solar gain through windows, and ERVs integrated with 100% variable geothermal heat pumps.

Sweat Equity

- For well designed radiant flooring and hydronic systems, most new home buyers can install their own pex tubing in a matter of hours or over a weekend and reduce costs for ICF structures with concrete floors to less than $0.50 sqft. depending on pex tube spacing.

Pex Tubing

Buffer Tank & Mixing Tank Bus Designs

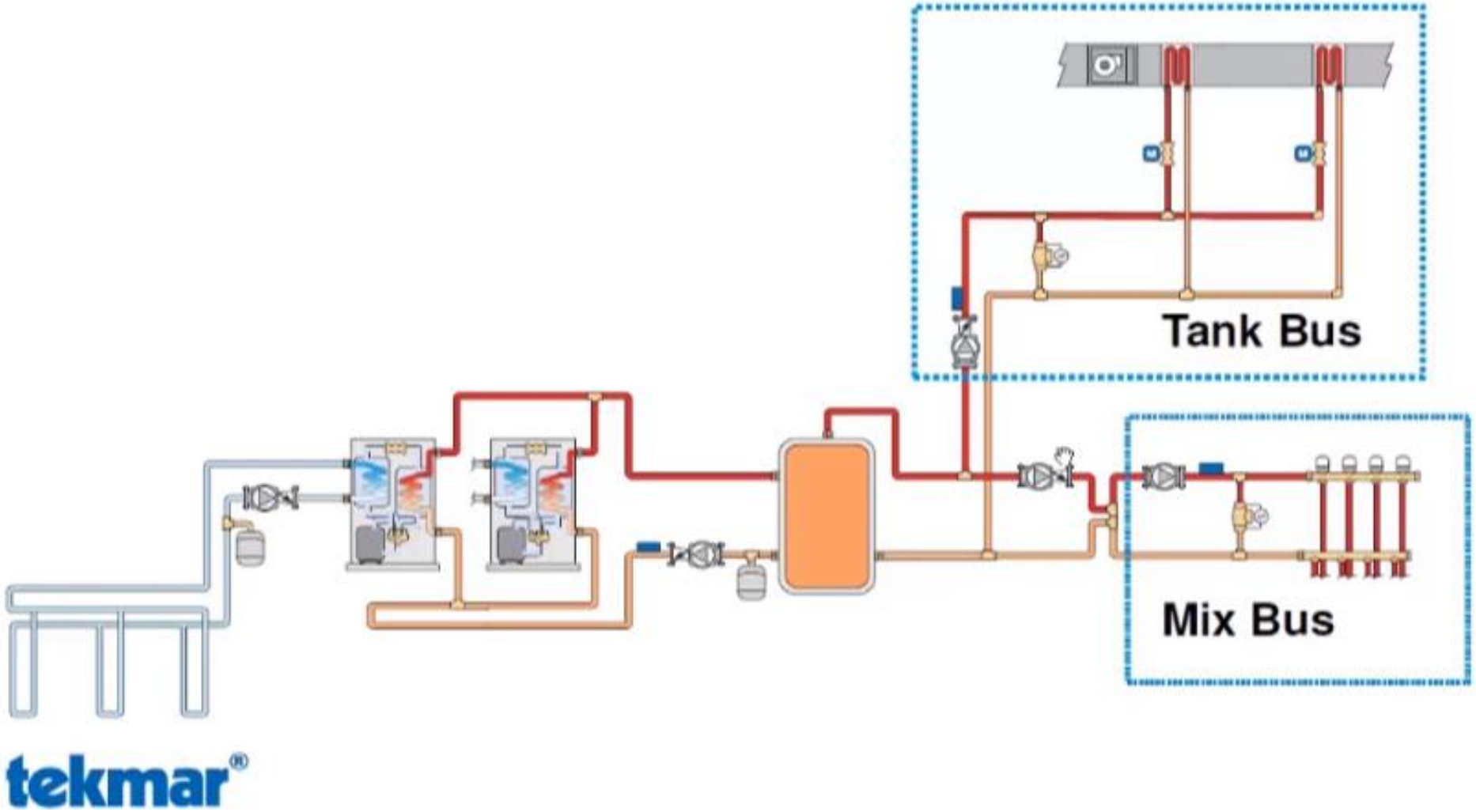

Buffer Tank & Mixing Bus Design Temperatures

Each of the three water temperatures has a design temperature selection range for maximum configurability.

	Tank Design	Mix Design
Defaults	110°F (43.5°C)	110°F (43.5°C)
Range	70 - 200°F (21 - 93.5°C)	70 - 200°F (21 - 93.5°C)

tekmar®

Tekmar House Control 406 - 2 Temp. System

The House Control 406 can operate the required circulators in a two water temperature system.

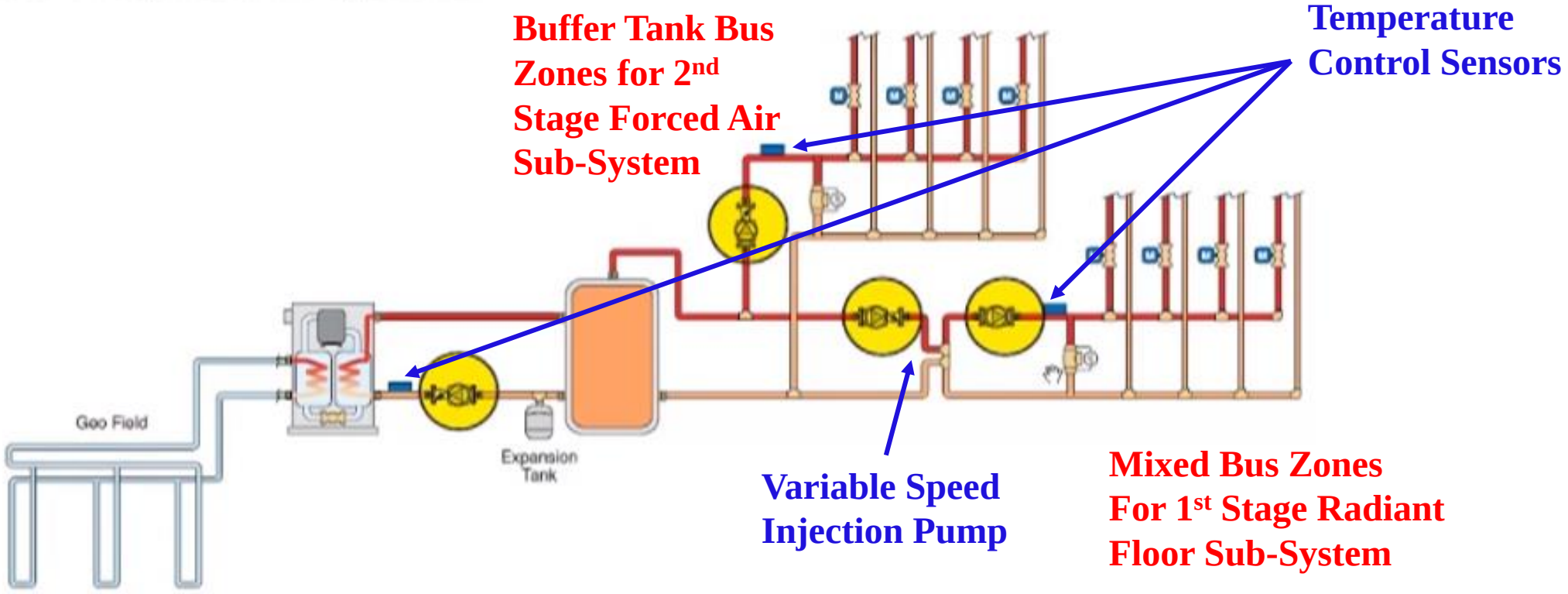

tekmar®

Tekmar House Control 406 - 2 Temp., 2 Bus, 2 Stage, 2 GSHP System

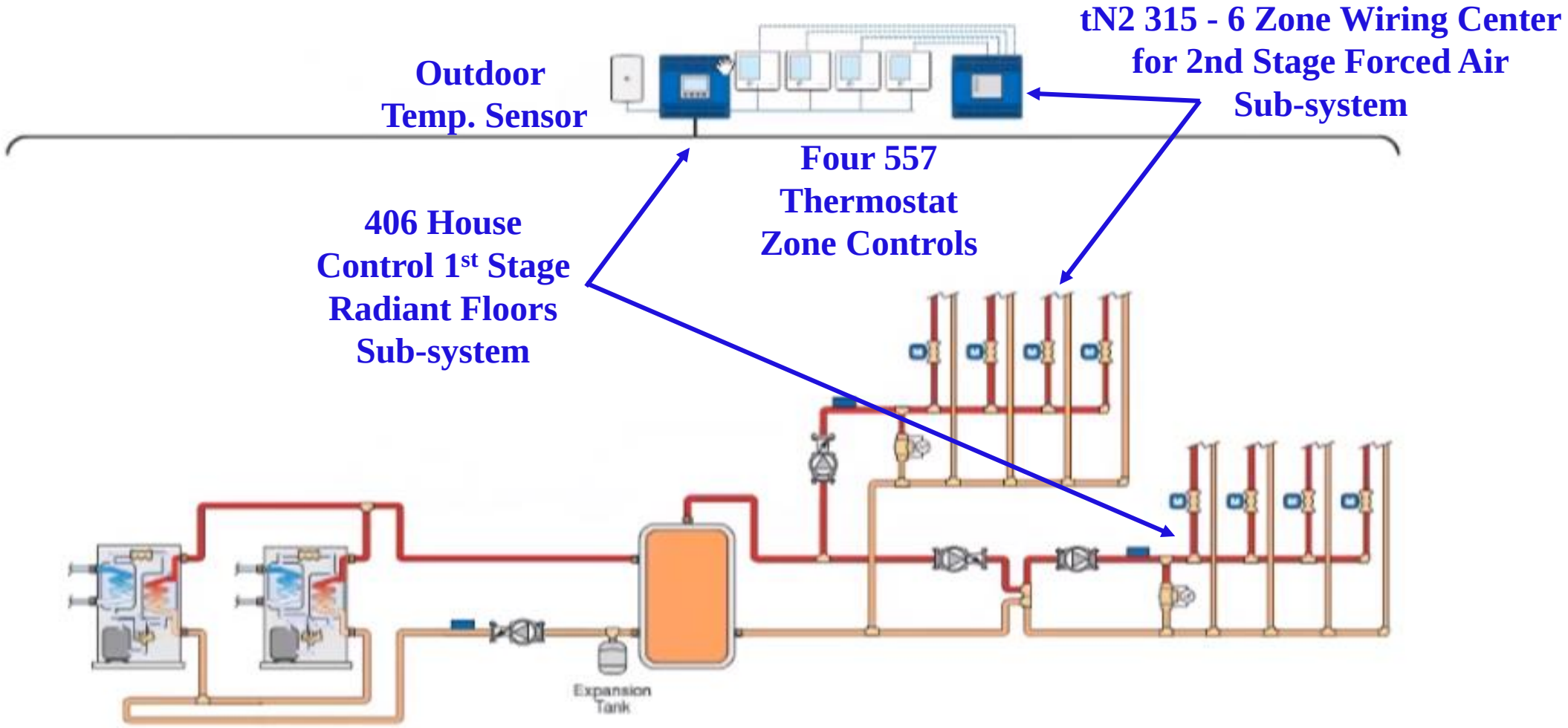

tekmar®

Tekmar House Control 406 - 2 Temp., 2 Bus, 2 Stage, 2 GSHP Wiring System

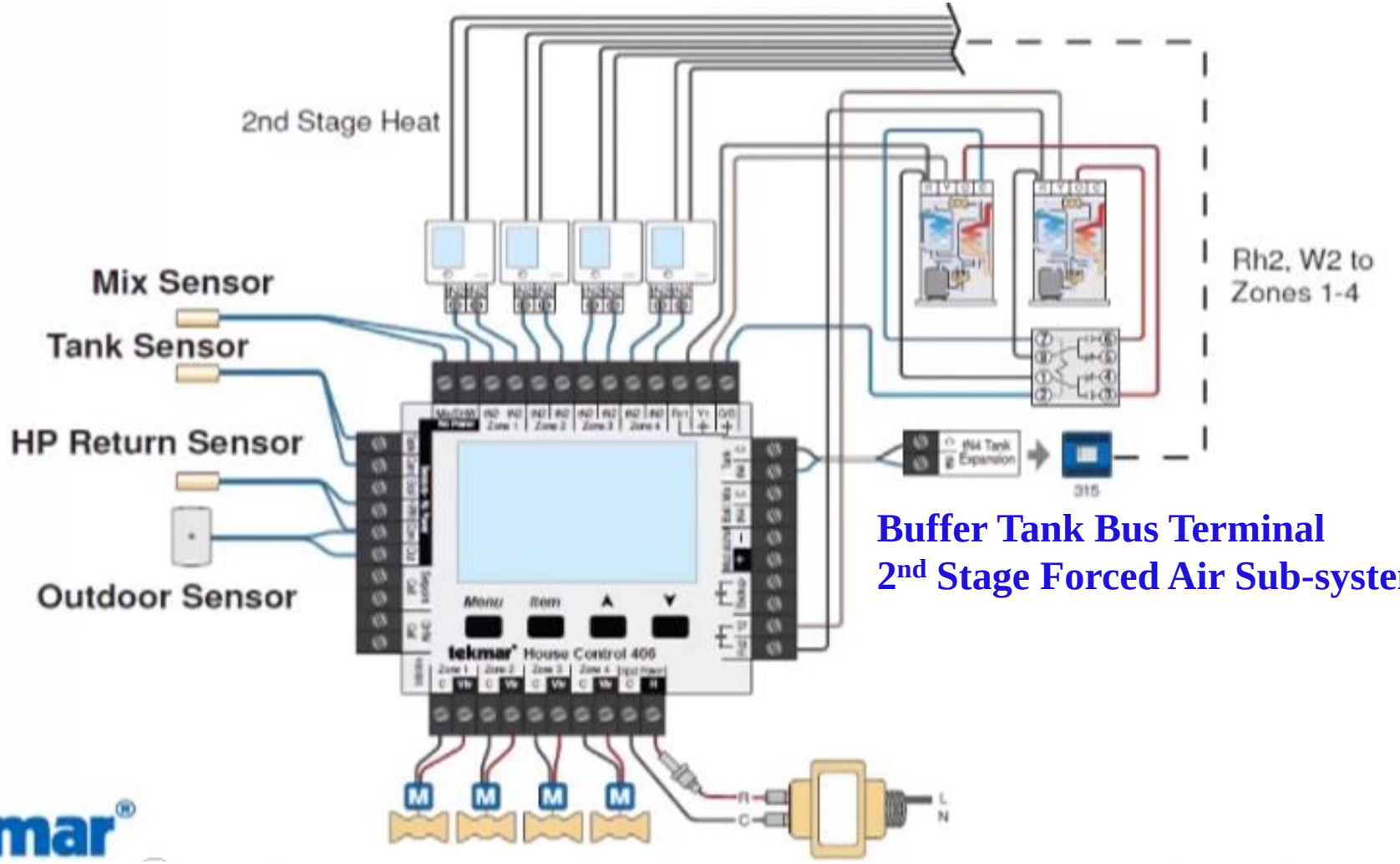

Buffer Tank Bus Terminal
2nd Stage Forced Air Sub-system

tekmar®

406 Control Heat/Cool Switchover

- In order for the switch from heating to cooling mode can occur, the following is required:
  - The majority of heat/cool thermostat zones must signal to switch
  - The O/B Switchover Interlock time (from 10-180 minutes) must have expired

Majority of Heat/cool Zone Thermostats

Switching between heat mode and cool mode requires the following:

1. A majority of heat/cool thermostats must ‘vote’ to switch

tekmar®

O/B Switchover Interlock Time

2. O/B Switchover Interlock time must have expired

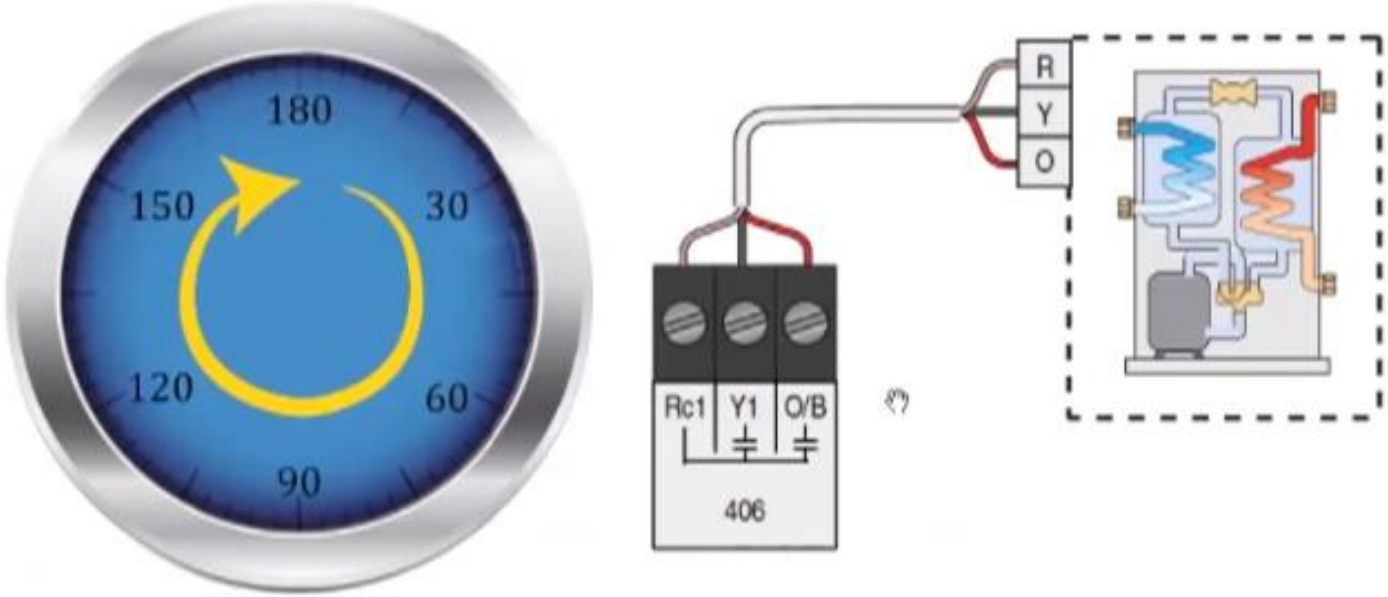

tekmar®

Switchover Purging of Buffer Tank

Switchover includes purging to maximize efficiency, followed by a pre-cool or pre heat cycle.

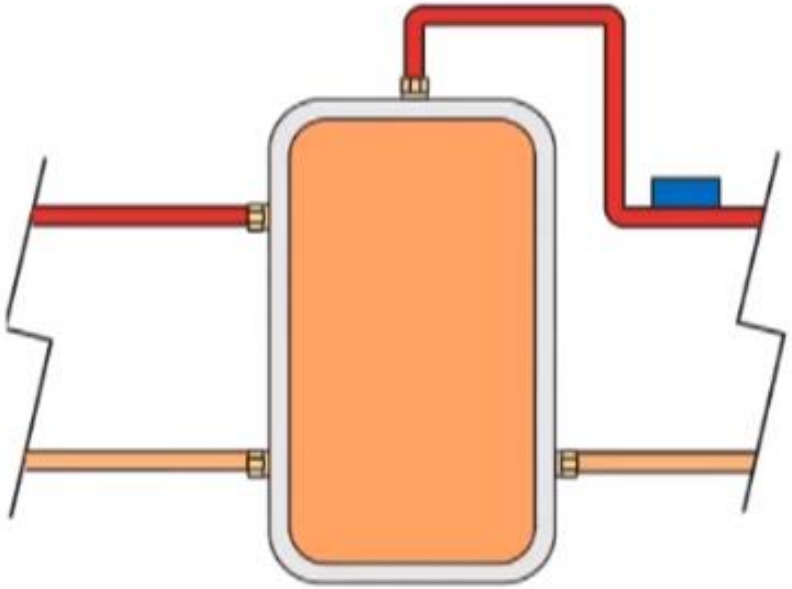

Step	Heat pump	Zones
Heat	On (Heat)	Heat
Purge	Off	Heat
Pre-Cool	On (Cool)	Off
Cool	On (Cool)	Cool
Purge	Off	Cool
Pre-Heat	On (Heat)	Off
Heat	On (Heat)	Heat

When switching from heat to cool mode, the hot water in the tank is sent to zones still requiring heat and *vice versa.*

tekmar®

Programmable Operating Limits

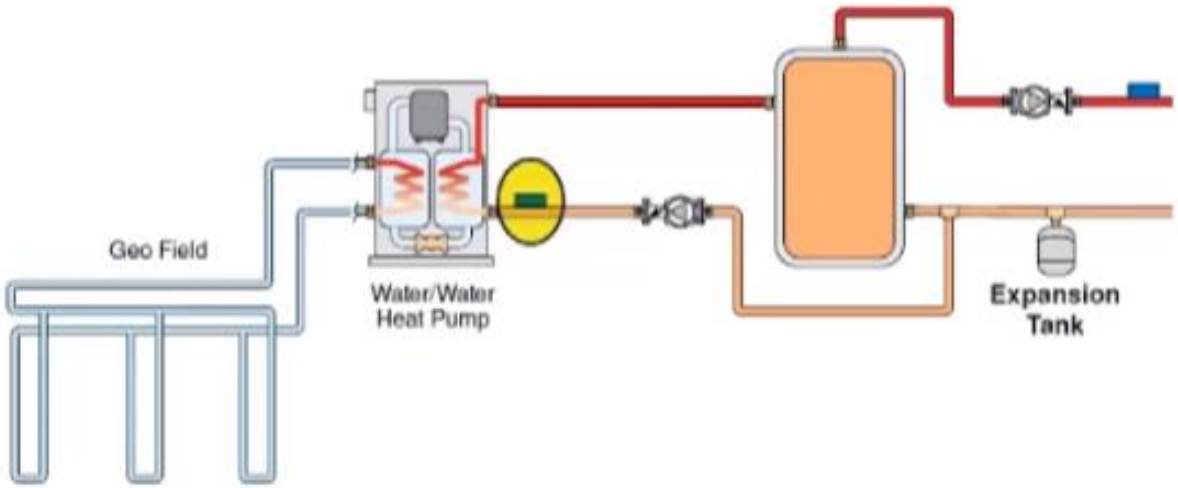

Heat Pump Return Maximum **(usually caused by back-up heat source)**

- Prevents operation in heating mode with high return temperatures
- Range: 70 to 180°F (21 to 82°C)

Heat Pump Return Minimum

- Prevents operation in cooling mode with low return temperatures
- Range: 30 to 70°F (1 to 21°C)

tekmar®

Heat Pump Staging

The House Control 406 brings on the second stage of heat pump when the first stage is unable to satisfy the demand.

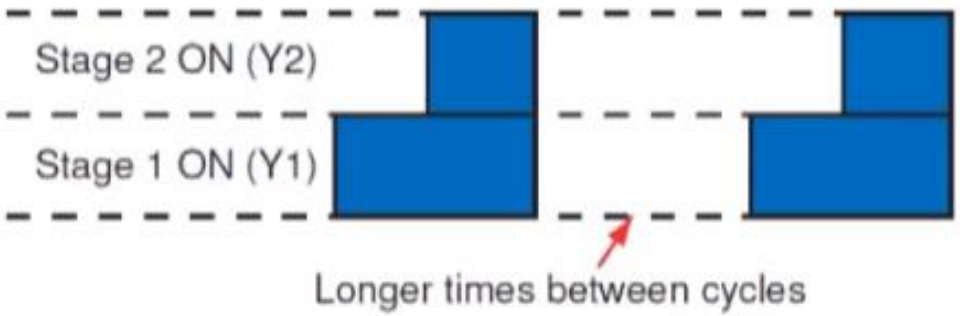

- Both stages are turned off simultaneously to give the ground loop longer recovery time

tekmar®

Thermostat 557

How does the Thermostat 557 enhance the operation of the House Control 406?

tekmar®

Thermostat 557 Features

One stage fan & humidity control

Fan

Humidity Control

One or two stage heat & heat/cool control

Radiant Floor Fan Coil

Convector

Furnace

Backup Heat

hydronic heat/cool terminal units

tekmar®

Floor Minimum & Maximum Temperatures

The 557 can have precise floor temperature control by configuring floor minimum and maximum temperatures.

- Ensure comfort
- Protect flooring (e.g., Wood floors, etc.)
- Address solar gains

tekmar®

Radiant Floor & 2nd Stage Forced Air Control

The 557 can operate a radiant floor and a 2nd stage heat-only or heat/cool terminal.

tekmar®

Additional Programmable Delay Time (W2)

The 557 has an additional programmable delay time for the second stage heat operation.

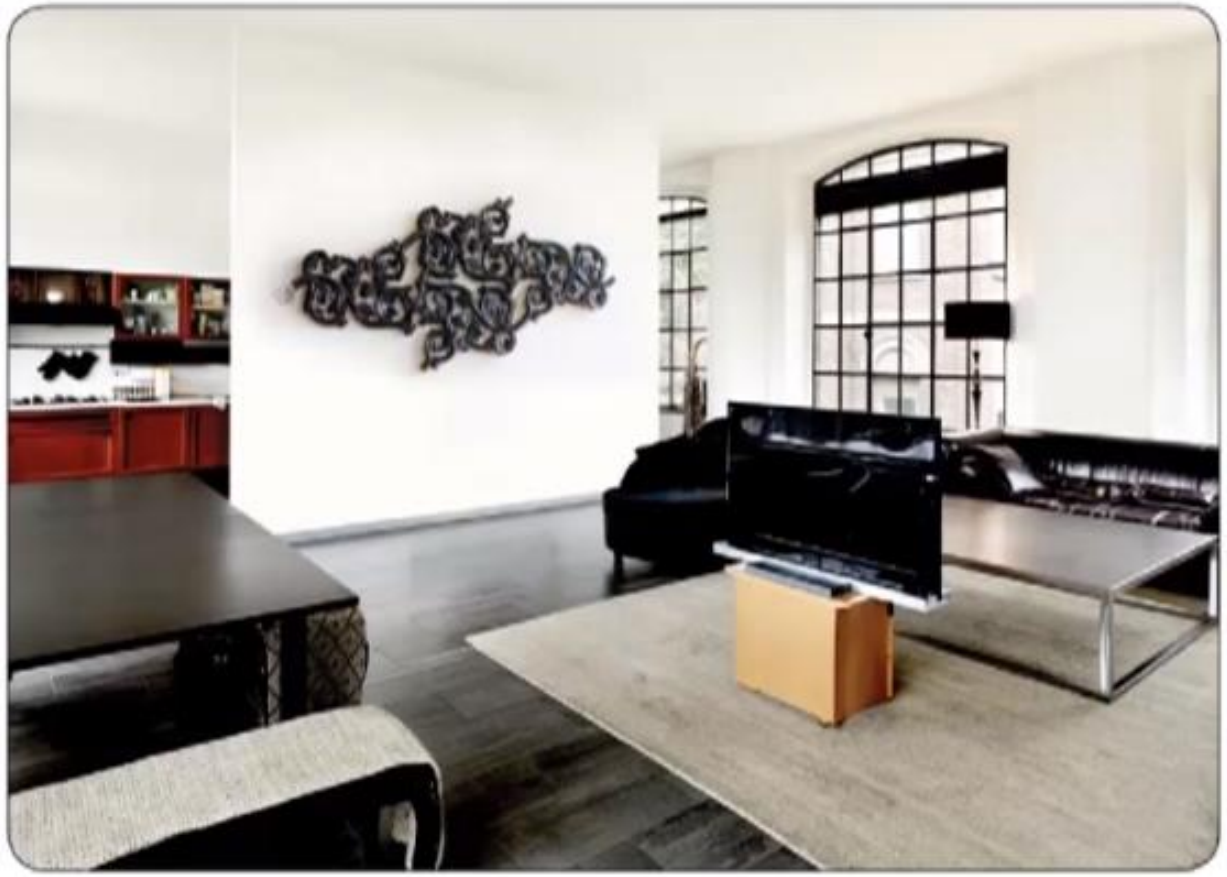

W2 only works on Back-up Heating Source – it is not available for back-up cooling source

tekmar®

Radiant Floor Warm Weather Shutdown (WWSD)

Design a radiant system that won't cause overheating in rooms with large solar gains.

Allows setting an outdoor temperature limit such as 55 °F in which the radiant floor system will shutdown until the temperature drops below the programmable set-point in order to prevent overshooting /overheating from solar gain.

- W Heat WWSD prevents the operation of the radiant system during the mild conditions of spring and fall

tekmar®

Excessive heat/cool switchovers have a sharp impact on comfort and efficiency.

Both the Thermostat 557 and the 406 House Control have interlock switchover controls that must be satisfied to switch from heating to cooling or *vice versa.*

tekmar®

House Control 406 & Thermostat 557 Communication

Communication between the system control and the thermostat is essential.

- Prevent inadvertent heating or cooling
- Avoid complex wiring
- Efficient heat/cool switchover

tekmar®

Thermostat 557 Switchover Controls

The Thermostat 557 has a series of conditions that must be satisfied before a floor cooling call is communicated to the House Control 406.

- *WWSD in effect*
- *Switchover interlock time expired*
- *Floor Cooling ON*
- *Room temperature is above 75°F for two consecutive air cycles*

Dew point control for regulating humidity Is recommended but is not required since Not all localities are affected by humid weather conditions.

Another condition that must be met before Switchover is that the House Control 406 has "not received any tank heating calls" for two hours.

tekmar®

Controlling Humidity

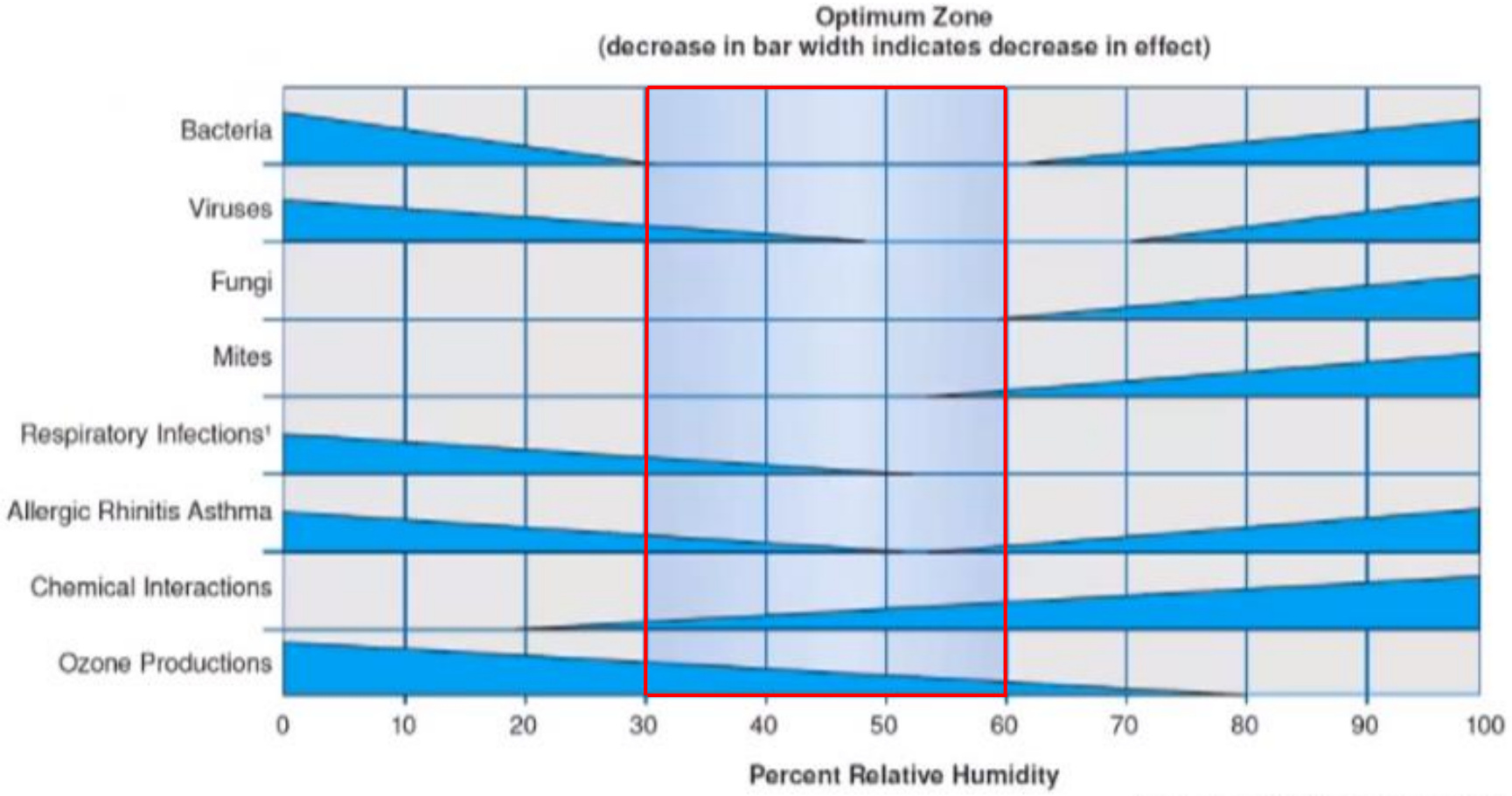

1. Insufficient data above 50% rh.

tekmar®

Thermostat 557 Humidity Sensor

The 557 features a built-in humidity sensor, and may also be connected to a remote humidity sensor.

These humidity sensors can be used to regulate humidity via humidifiers/ dehumidifiers and the 2nd stage forced air system to maintain between 30-60%.

- Relative humidity is controlled by operating humidification and/or dehumidification equipment

tekmar®

Dew Point Reset via House Control 406

The Thermostat 557 communicates the relative humidity measurement to the House Control 406 for dew point calculation.

The House Control 406 will use the humidity data to maintain the zone temperature 2 degrees above the dew point.

tekmar®

Thermostat 557 Auxiliary Sensor Options

In addition to built-in humidity and temperature sensors, the 557 has three auxiliary sensor input terminals.

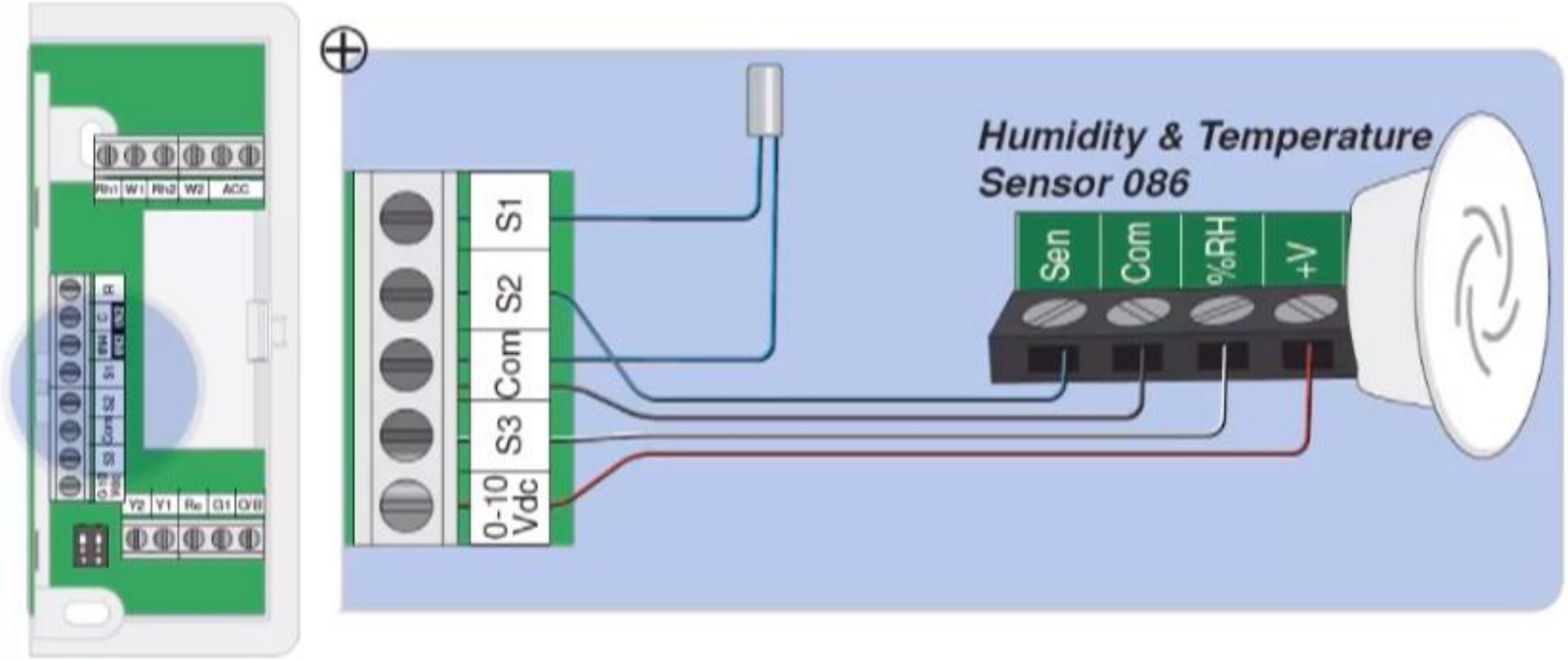

tekmar®

HC-406 + T-557 Application

Radiant Floor with Hot / Chilled Water Fan Coil

Humidifier controlled by the House Control 406 via Thermostat 557 data Communication.

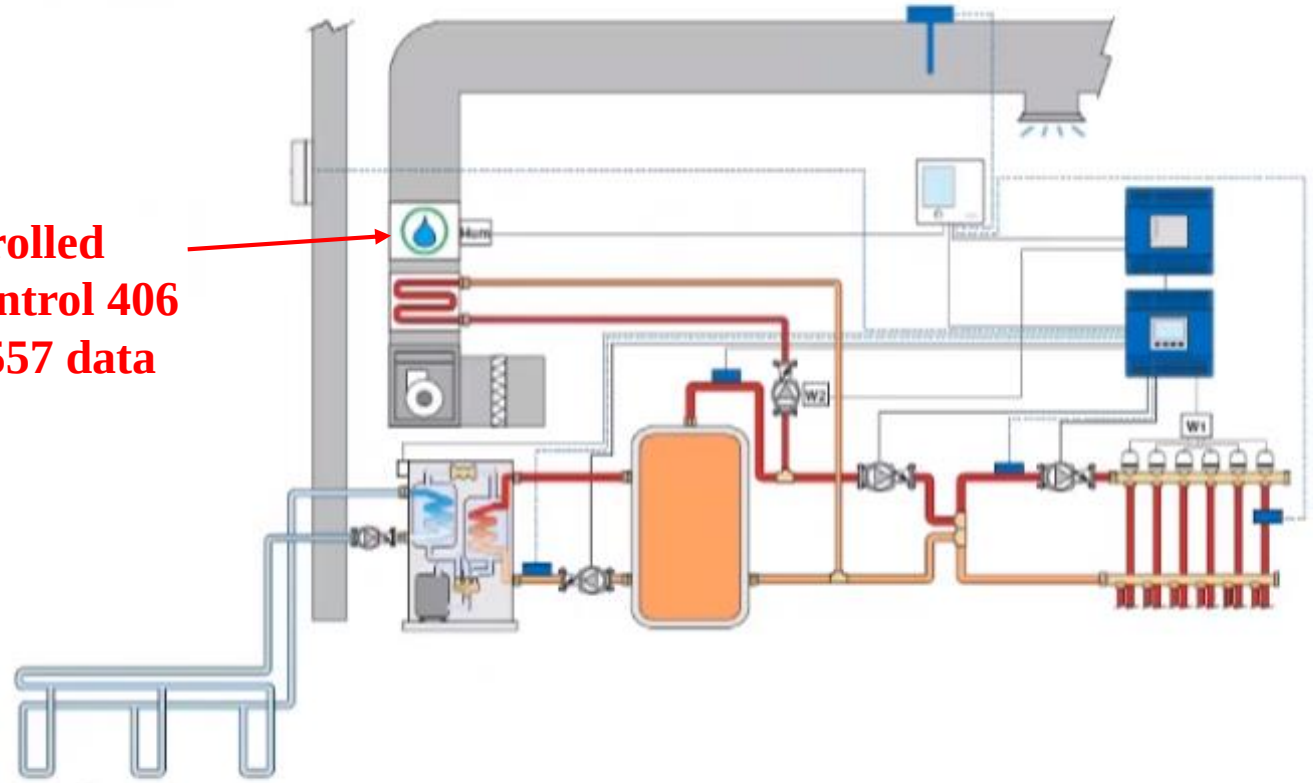

tekmar®

Designing Backup Heat Source

What are the reasons a backup heat source should be included in a geothermal system?

For super-insulated ICF structures that provide 0.0 ACH@50, in which HVAC requirements are reduced by up to 95%, GSHPs can economically be installed at near 100% of peak heating load by inserting field loops around the structure's footings and reducing total system costs by up to 50%.

When integrated with solar thermal, there are strategic advantages of incorporating redundancy, e.g., a higher temperature potable boiler for production of domestic hot water into the HVAC system design.

tekmar®

Integrated Solar Thermal – GSHP/ERV System Design

If the geothermal system has been designed appropriately, a backup boiler may be reserved for emergency situations only.

In this case, the solar thermal collector and auxiliary DHW boiler would serve as the back-up heat source for a state-of-the-art GSHP system.

The system design and 406 House Control can be programed to strategically use the solar thermal boiler to reduce the temperature differential between the source and supply, thereby increasing the COP of the GSHP.

This alternative energy approach that would provide unprecedented levels of system energy efficiency for heating, DHW, cooling, and ventilation.

tekmar®

Maintaining Thermal Balance

A backup heat source system is considered if the heating and cooling loads are not balanced.

By reducing the HVAC load by up to 95%, the volume of field loops required for heat and cooling exchange is reduced proportionately.

Hence, for a properly designed and strategically operated solar thermal and GSHP integrated HVAC system, thermal balance will be achieved with minimal investment in field loops that can be Installed around the footings of new structures.

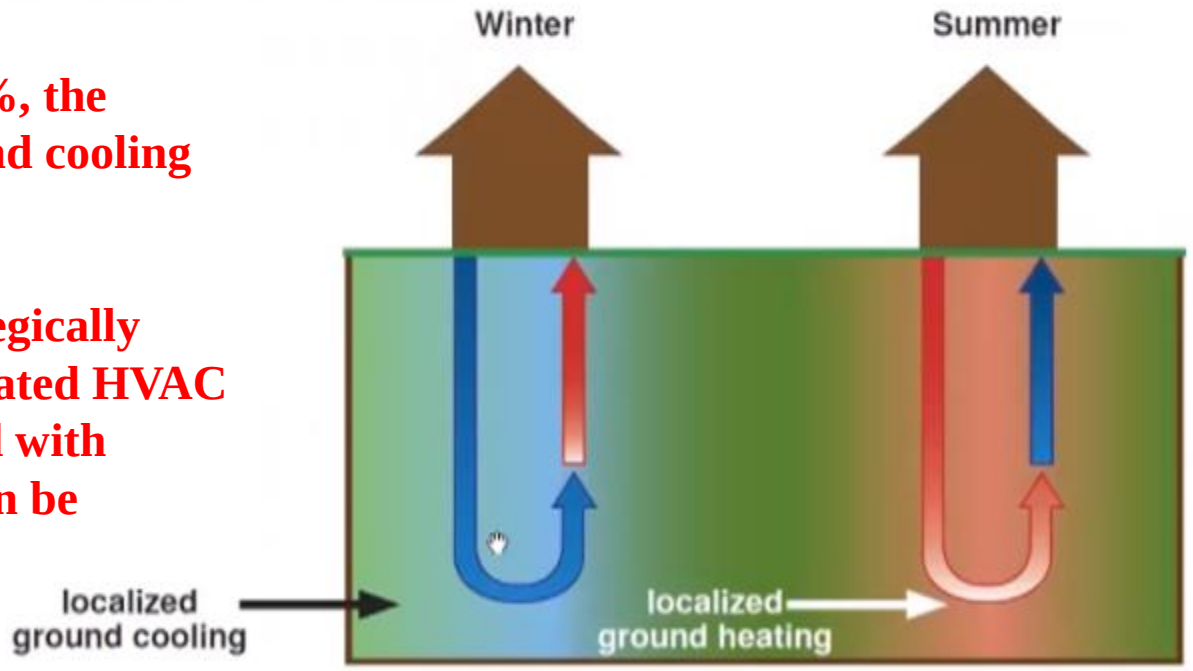

tekmar®

Unprecedented HVAC Efficiencies

An economic balance must be found between full sizing of the earth loop & equipment and the use of a backup heat source.

Integration of Solar Thermal and ERV technologies allows for substantially downsizing the GSHP system while providing unprecedented HVAC efficiencies with an appealing modified internal rate of return (MIRR) exceeding 10% for the entire HVAC system.

tekmar®

Solar Thermal and DHW Storage Integrated with the GSHP Buffer Tank

The solar thermal collector piping would deliver hot water to a DHW tank and perhaps also to the GSHP buffer tank as illustrated here and controlled via tekmar's Difference Setpoint Control 157.

As an alternative, an on demand hot water device could be installed on a solar thermal/ DHW insulated storage tank.

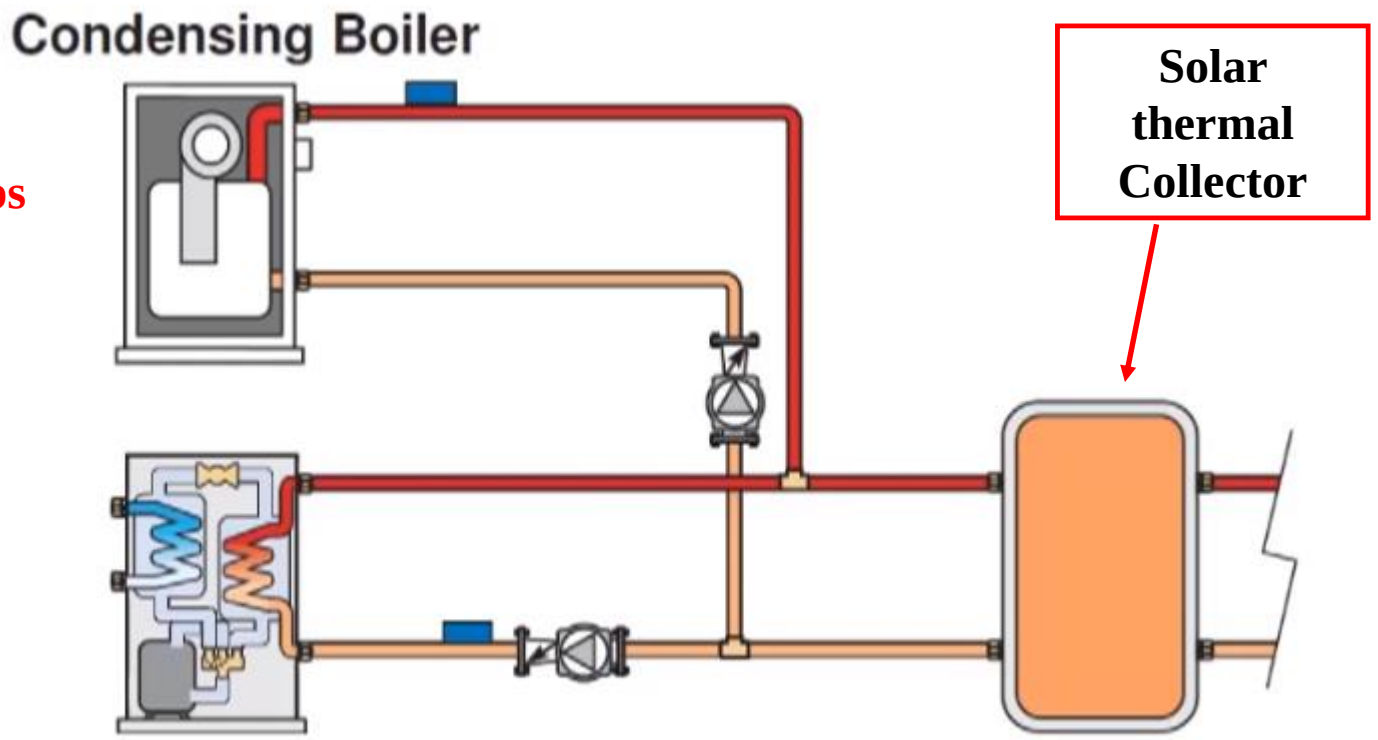

tekmar®

Electric Backup Boiler

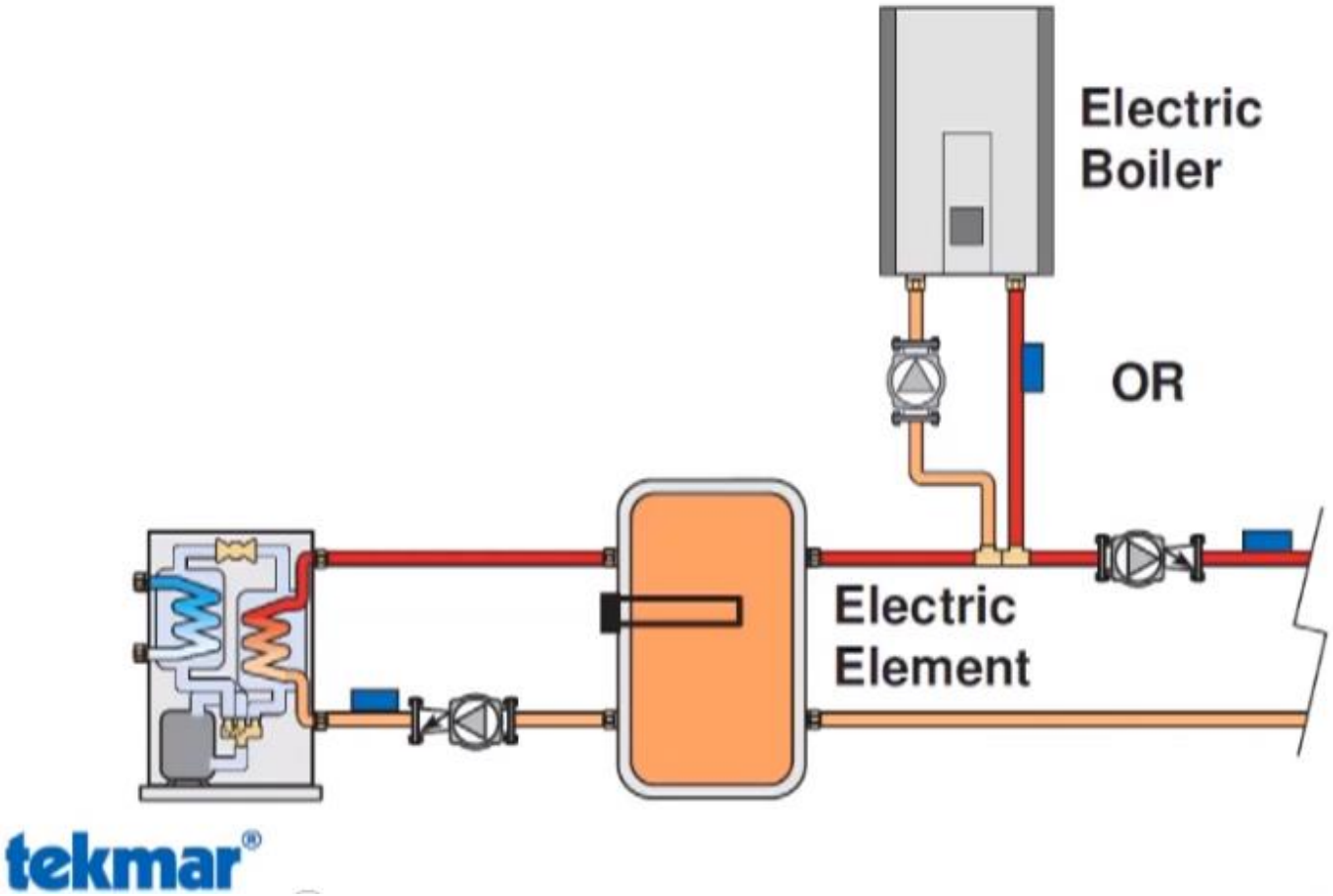

House Control 406 Backup Boiler Operation

The House Control 406 operates the backup boiler only under the following circumstances:

1. The heat pump is at maximum capacity, the tank target is still not satisfied, AND the backup delay has expired.
2. The heat pump return temperatures are too high.

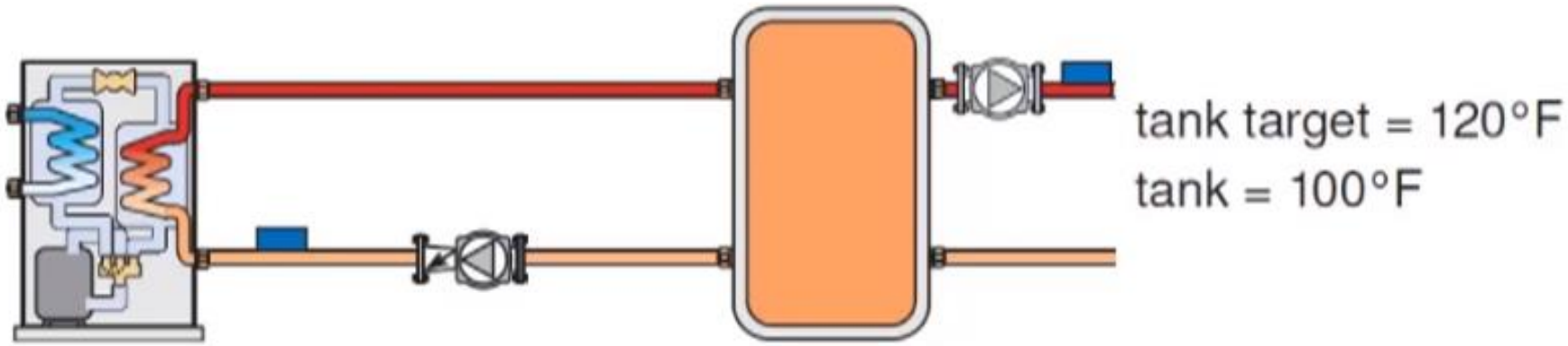

tekmar®

High Temperature Loads

High temperature loads that may be problematic if relying on geothermal energy production:

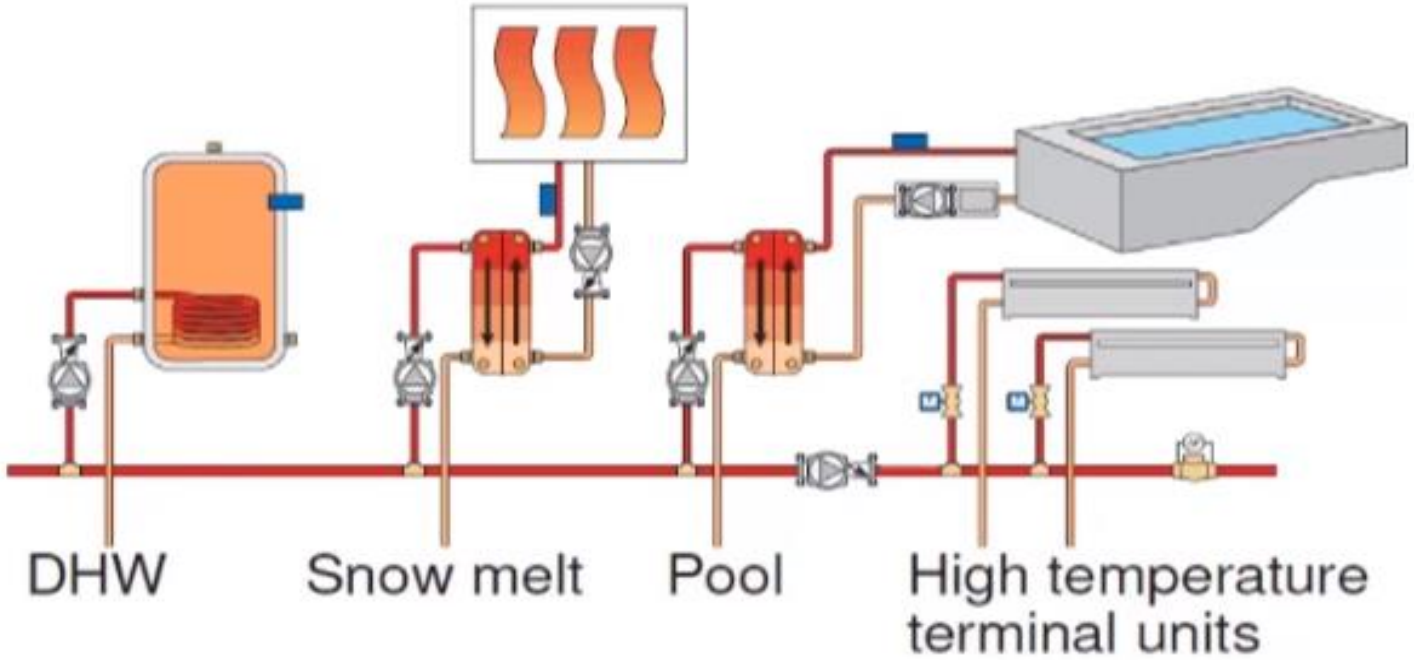

tekmar®

DHW Preheat Configuration

The House Control 406 can control a DHW preheat operation.

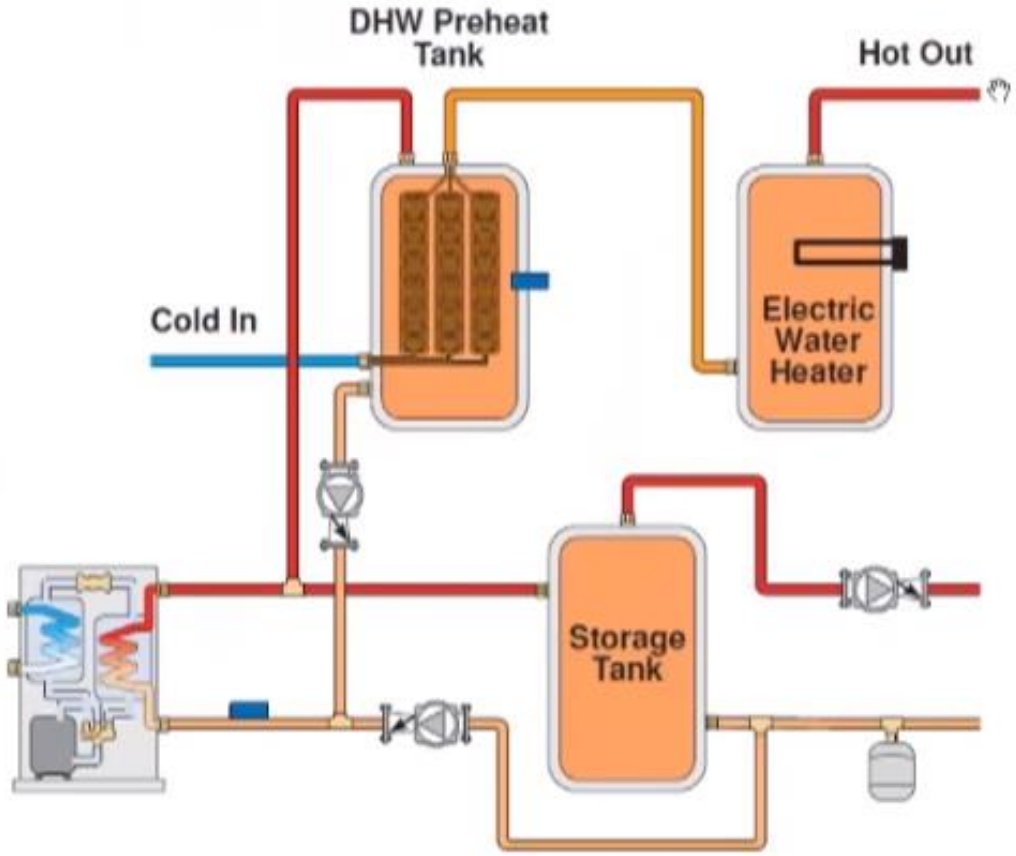

tekmar®

Desuperheater & Preheating DHW

A desuperheater is a small, auxiliary heat exchanger that uses superheated gases from the heat pump's compressor for DHW.

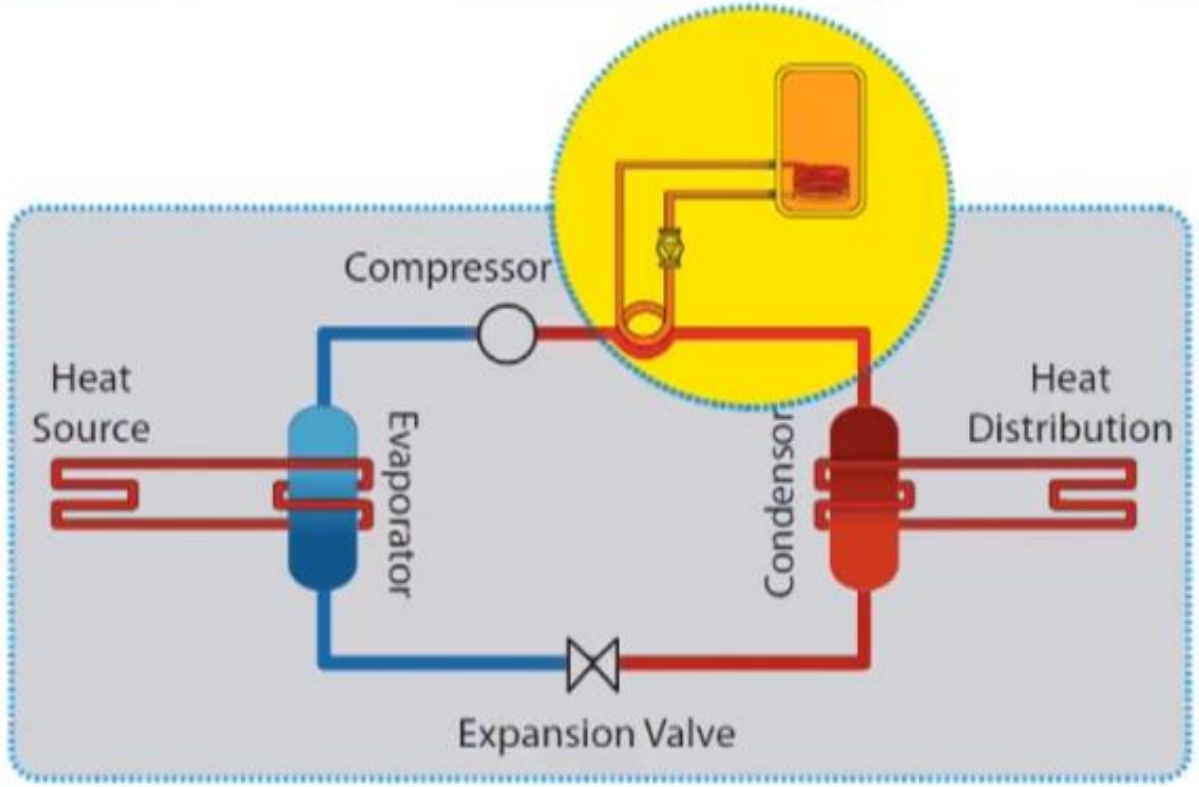

GSHPs equipped with desuperheaters allow for year round production (both in heating and cooling modes) of hot water that can be piped into the DHW/solar thermal storage tank for integration with either a natural gas condensing boiler or an electric boiler.

tekmar®

Desuperheater GSHP & Condensing Boiler

In this case, the solar thermal collector would be piped directly into the desuperheater storage/DHW tank? GSHP buffer tank??, or the condensing boiler??

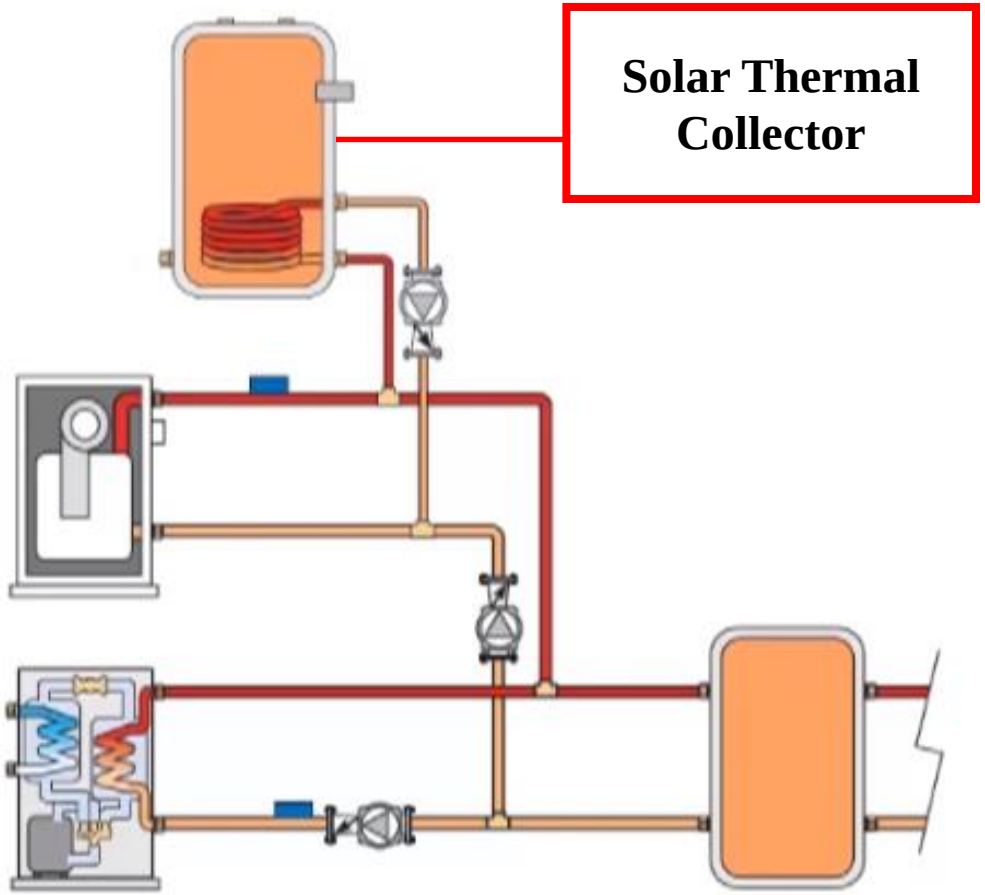

tekmar®

Snow Melting Operations

Geothermal systems can be used to provide heat for snow melting operations.

- The system must be sized for the load, and designed appropriately

tekmar®

Snow Melting Design

Key control issues when including snow melt operation in a geothermal system:

For integrated GSHP systems, solar thermal collectors can be used to provide the majority of hot water required for snow melting operations. This approach would be ideal for use in conjunction with tekmar's Snow Melt Control 654, Arial Snow Sensor 095, and Ground Snow Sensors 090 & 094.

- Reduce water temperatures whenever possible
- Minimize run-time

tekmar®

Slab Reset Feature for Snow Melt

With Slab Reset, supply water temperatures for snow melt can be controlled to remain as low as possible, based on outdoor tempearture.

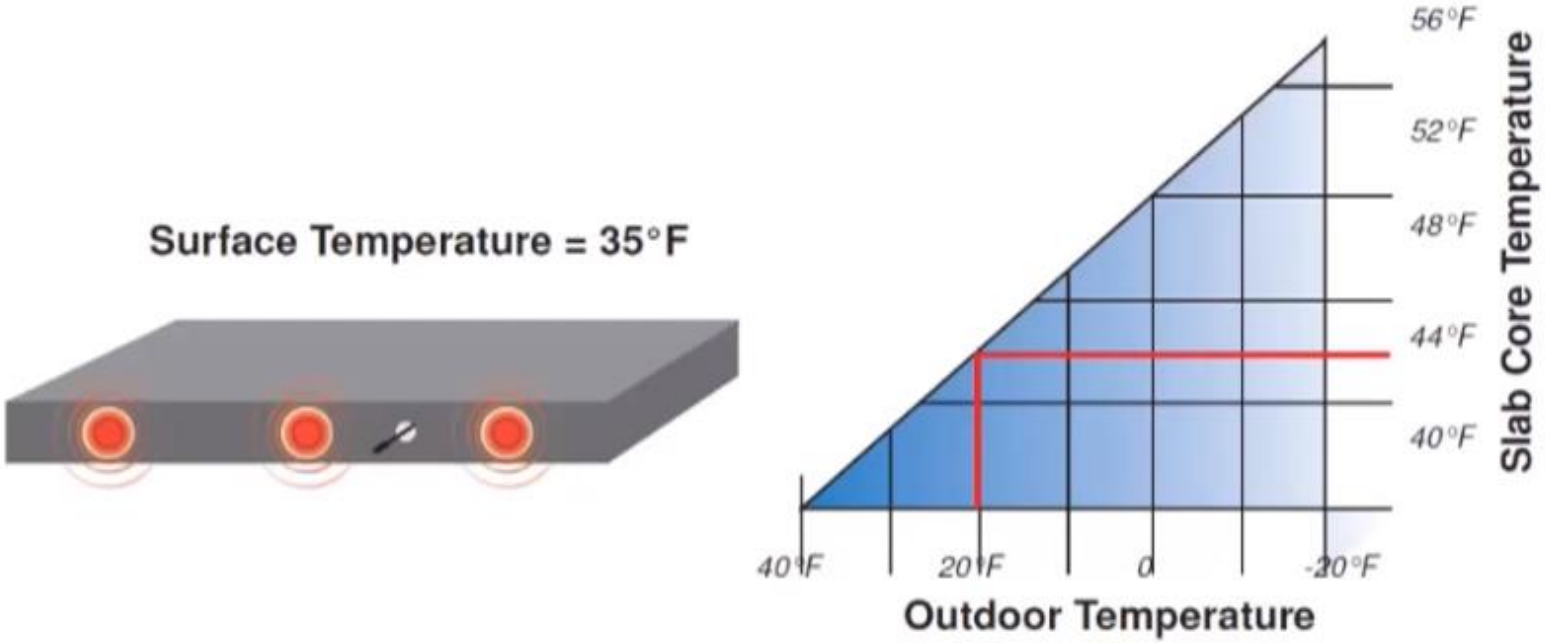

tekmar®

Automatic Snow/Ice Sensor

The installation of an automatic snow/ice detector will minimize the operation of a snow melt system in order to preserve geothermal capacity.

tekmar®

EconoMelt Feature

EconoMelt allows a user to provide a manual start, while still benefitting from an automatic stop.

- Option to shovel before melting
- Reduces run-time
- Requires 090/094 Snow/Ice Sensor

tekmar®

GSHP System Snow Melt Design Schematic for Buffer Tank Bus

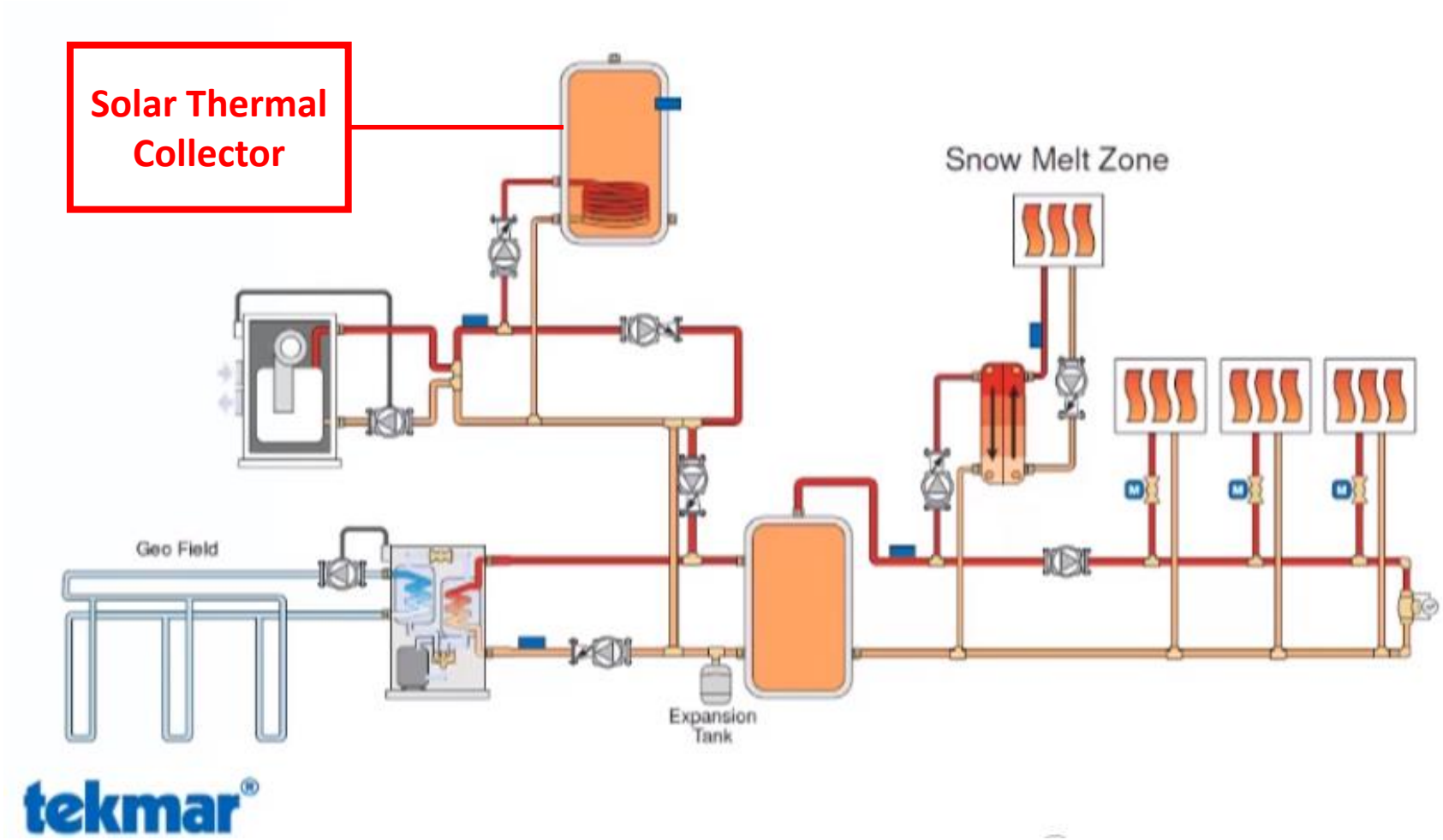

GSHP System Snow Melt Design Wiring for Buffer Tank Bus

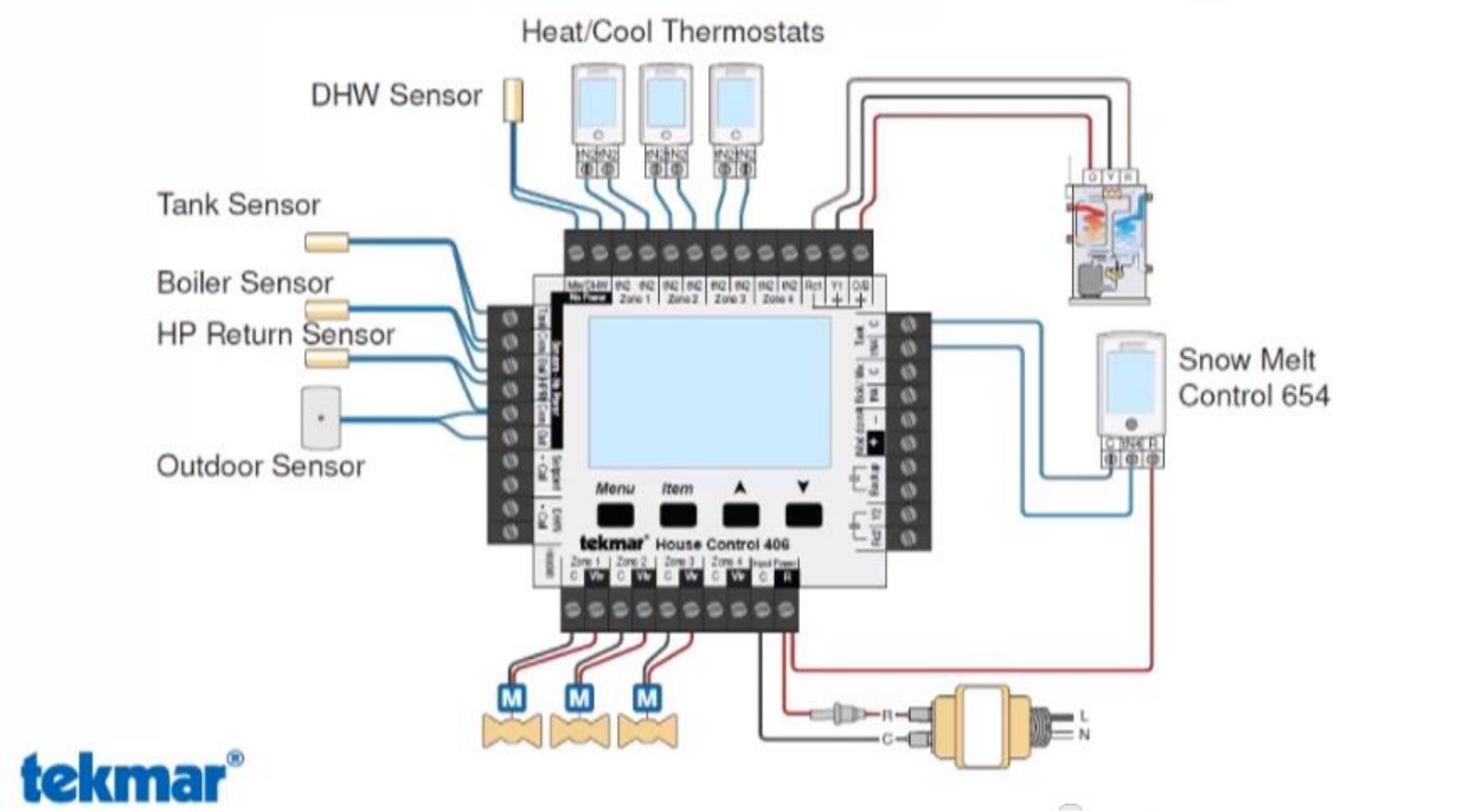

GSHP System Snow Melt Design Schematic for Boiler Tank Bus

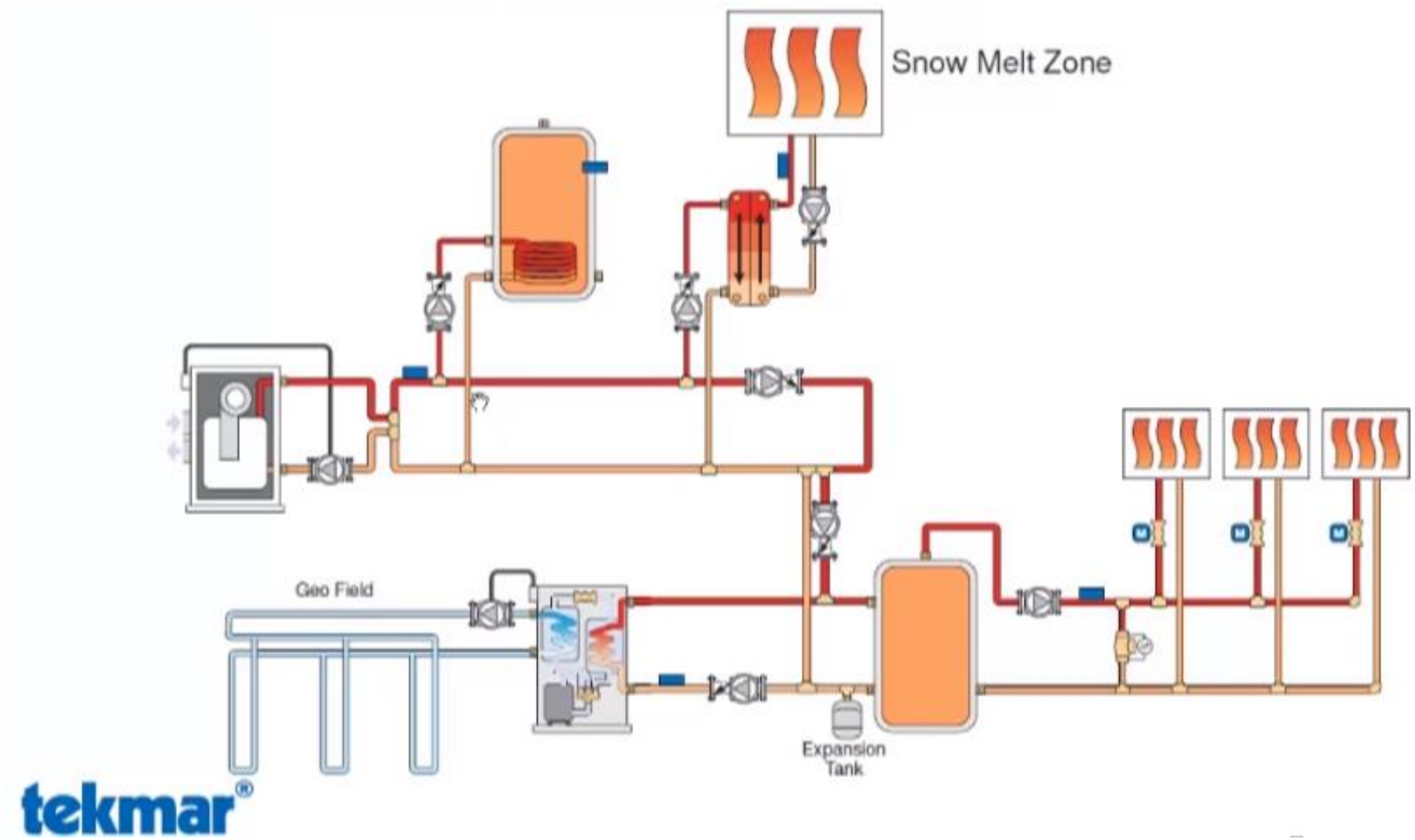

GSHP System Snow Melt Design Wiring for Boiler Tank Bus

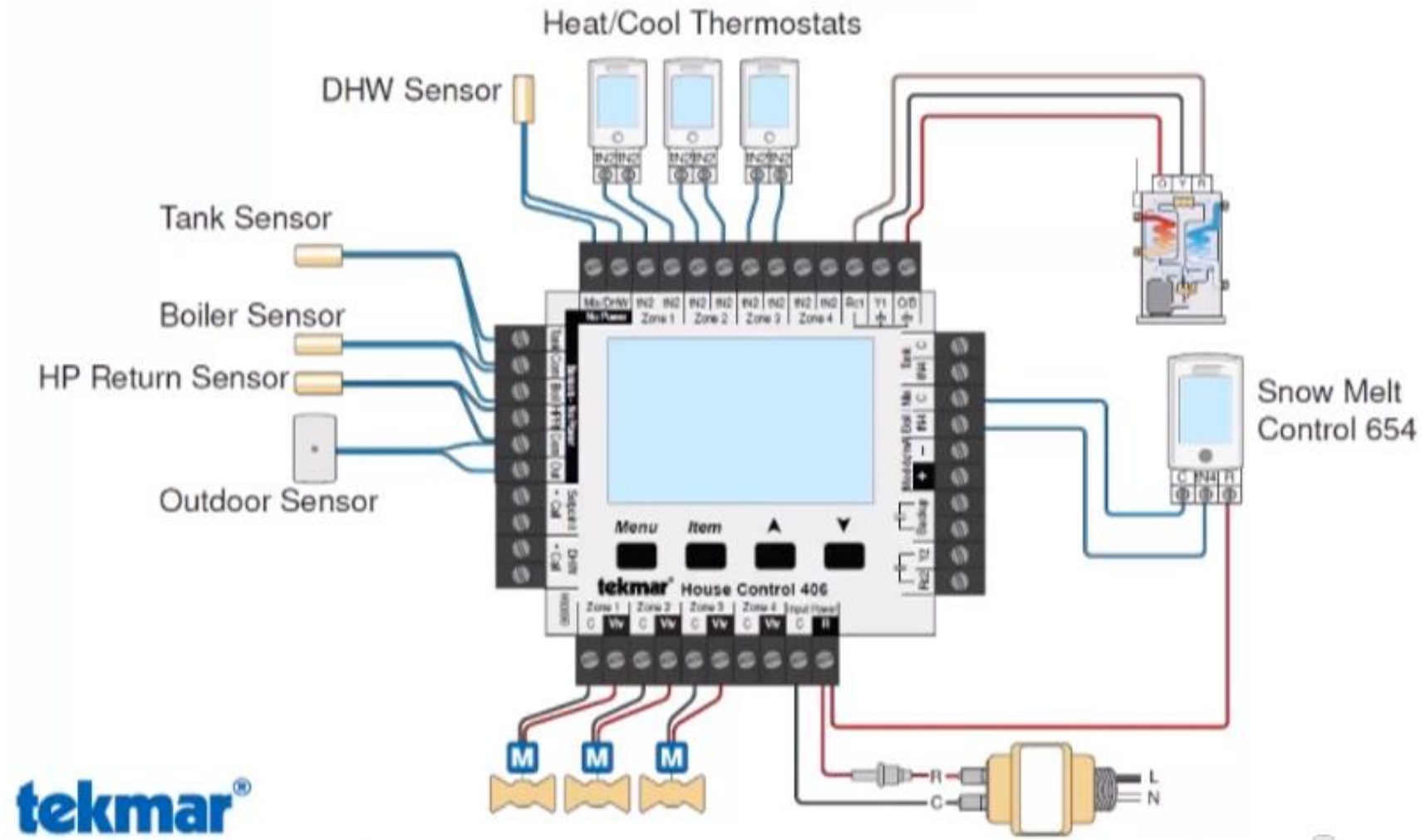

tekmar®

GSHP System Pool/Spa Heating

A pool or spa could also be piped off either the tank bus or the boiler bus.

tekmar®

GSHP System Pool/Spa Heating Schematic for Boiler Bus

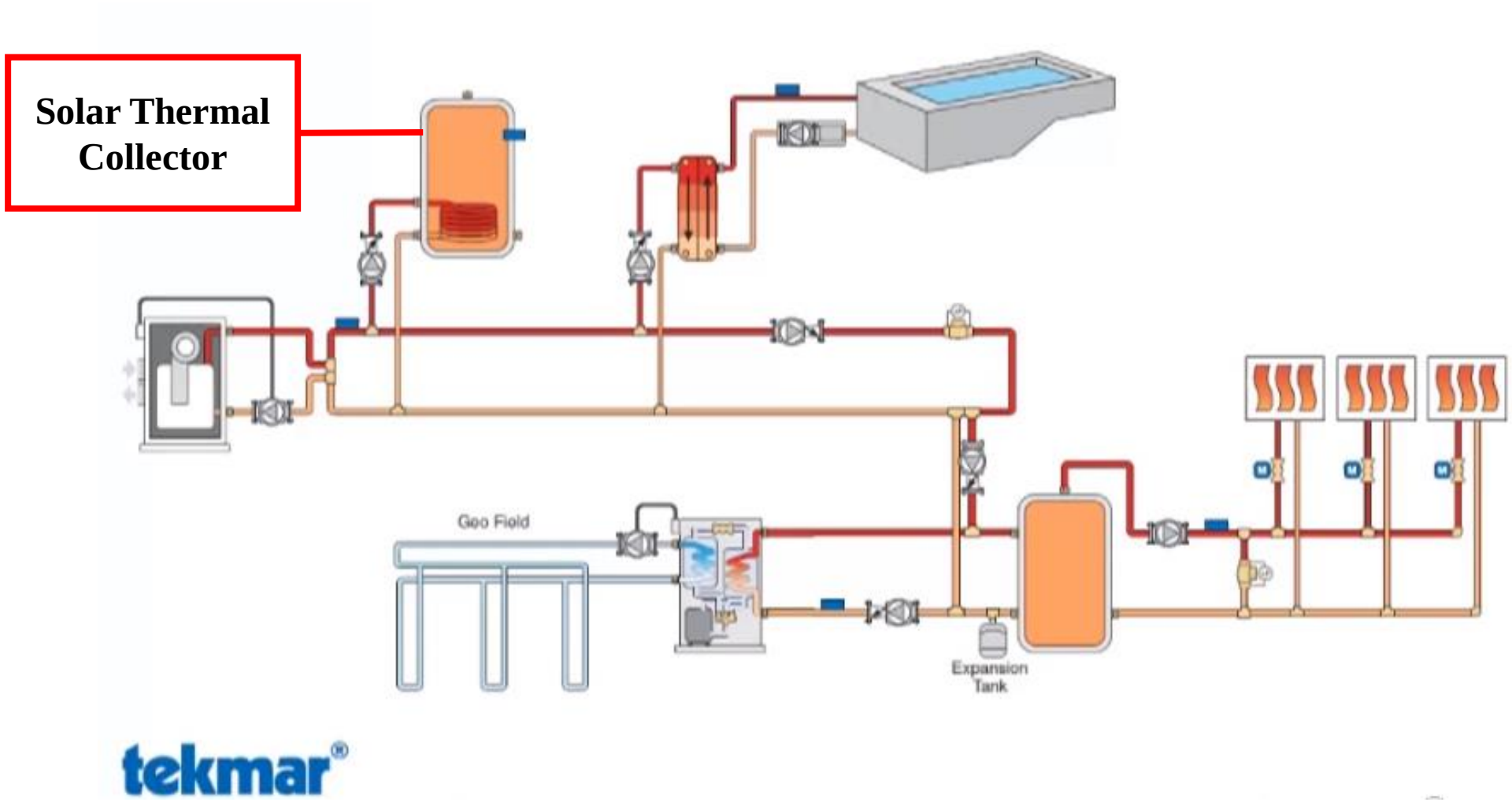

GSHP System Pool/Spa Heating Wiring for Boiler Bus

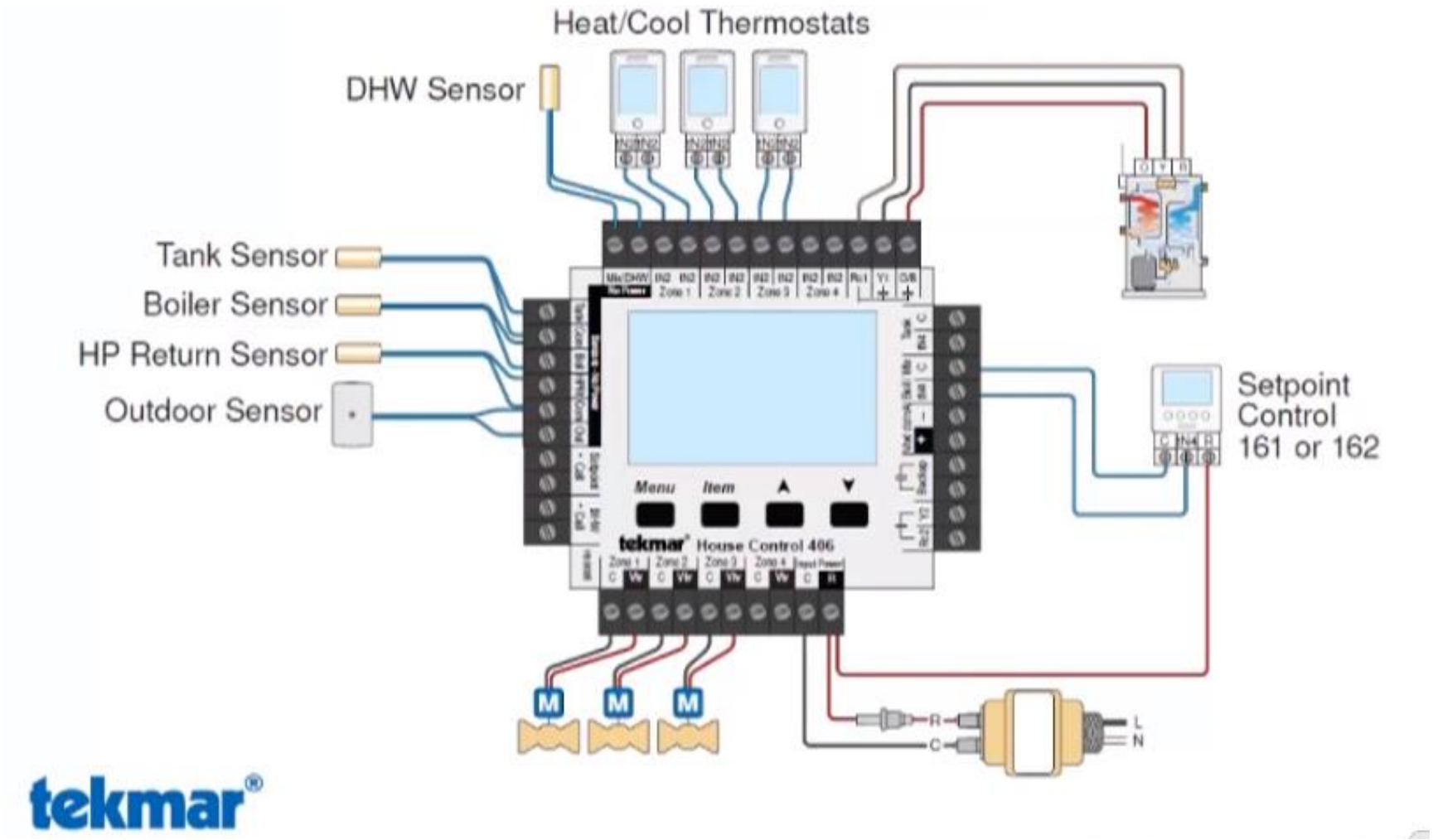

GSHP System Pool/Spa Heating Schematic for Buffer Tank Bus

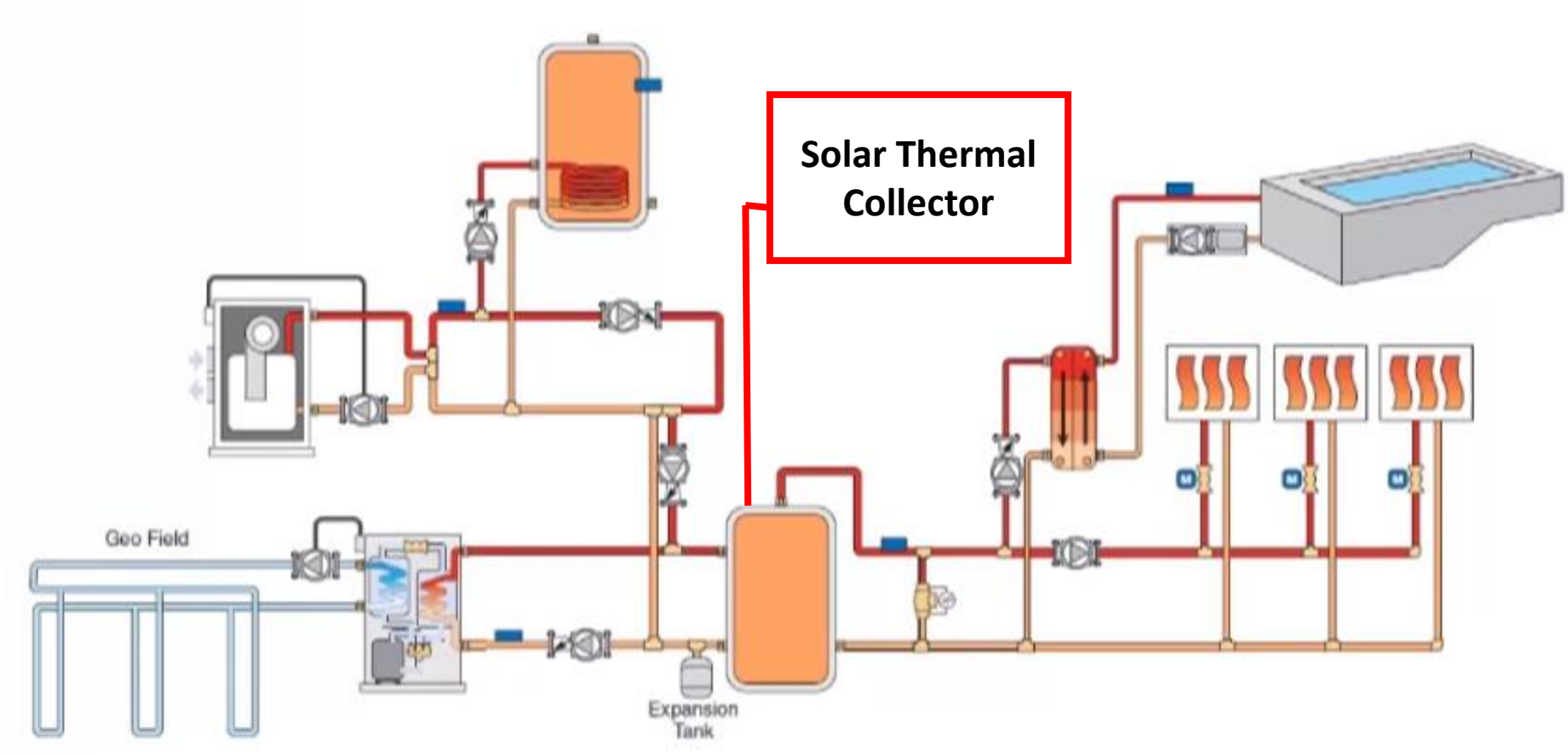

tekmar®

(No radiant cooling would be available in this radiant heat only configuration)

GSHP System Pool/Spa Heating Wiring for Buffer Tank Bus

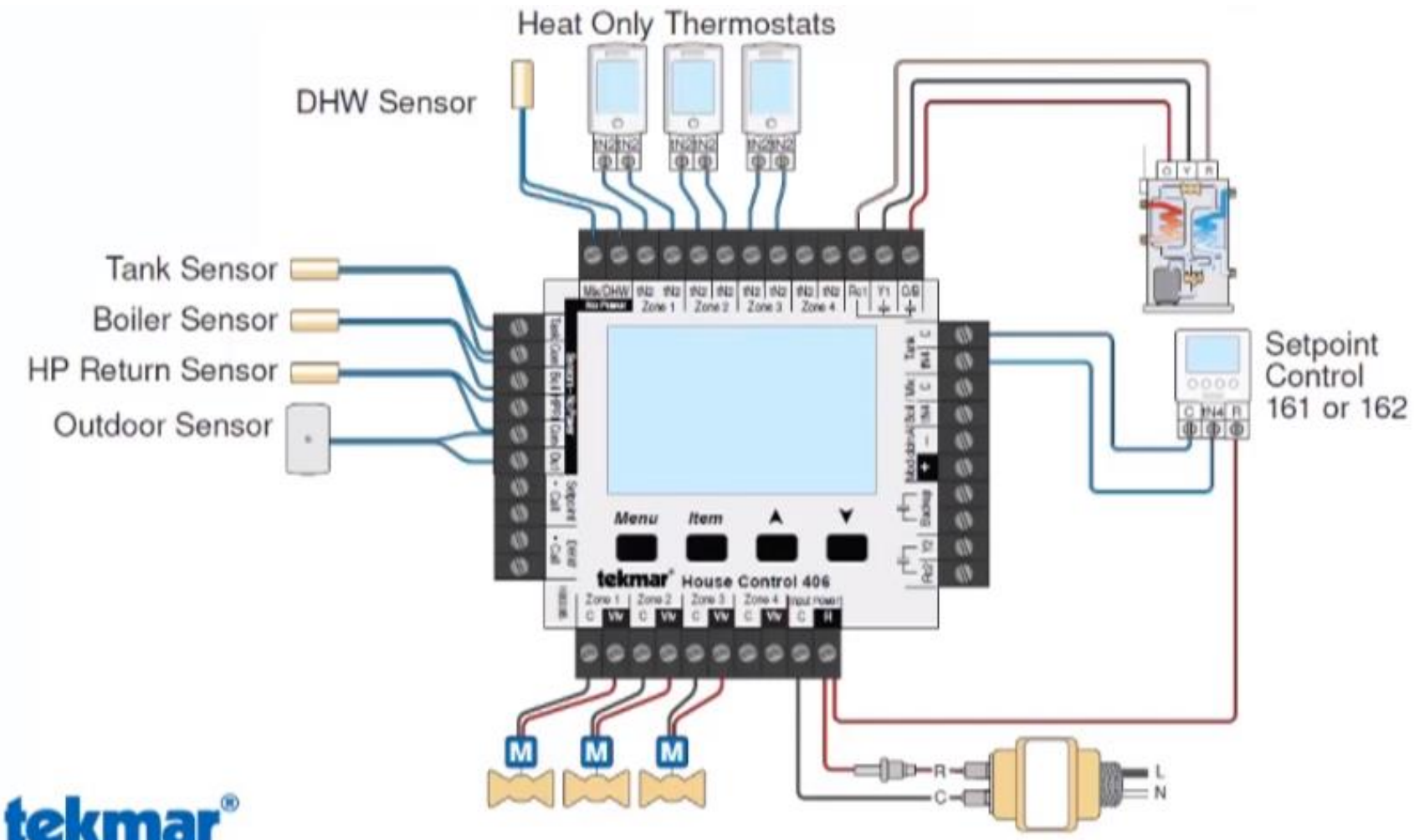

tekmar®

Calculating Cooling Loads

- Before attempting to design any cooling system, it is necessary to determine the design cooling load of the building. Cooling loads involve more inputs than do heating loads.
- Cooling loads can be categorized into two broad components: sensible cooling load and latent cooling load.
  - Sensible cooling addresses any aspect of the building or its occupants that adds sensible heat.
  - Latent cooling addresses any processes that add moisture to interior air.

Heat Gains: Sensible Cooling Load

- The following heat gains commonly contribute to the sensible cooling load:
  - Conduction
  - Solar Heat Gains
  - Conduction
  - Internal Lighting & Equipment

Conduction

- Conduction of heat through the thermal envelope of the building (walls, ceilings, floors, windows, doors, skylights).
- This sensible heat gain is directly proportional to the difference in temperature between the outside dry bulb air temperature and interior dry bulb air temperature.
- Such gains are only present when the outside dry bulb air temperature is higher than the interior dry bulb temperature.

Solar Heat Gains

- Sunlight entering through windows, glazed panels in doors or skylights can be a major contributor to sensible heat gain.
- The amount of heat gain depends on the area of the glazing, its orientation, its solar heat gain coefficient and the effect of any shading devices such as overhangs and sidewall fin panels.
- Energy-conserving building design typically includes such shading devices to minimize heat gain from direct solar radiation in warm weather. Even with shading, there will be some solar heat gain from diffuse solar radiation.
- Further measures that reduce solar heat gain include use of glazing with low solar heat gain coefficients, plantings that shade glazing from high summer sun angles and arrangements of glazing that block solar heat gain from afternoon sun, especially on west-facing walls.

Internal Lighting & Equipment

- Any electrically operated devices, such as lights, computers, refrigerators, water coolers or fans, create sensible heat gain. These gains need to be estimated based on the likely usage of such equipment on the cooling design day.
- Once the equipment is identified, its sensible heat output is calculated by multiplying its electrical wattage by 3.413 to obtain sensible heat gain in units of Btu/hr.

Heat Gains: Sensible & Latent Cooling Loads

- The following processes add both sensible and latent heat to interior spaces:
  - Occupants
  - Infiltration & Ventilation

Occupants

- Humans produce heat through metabolism. For the body to remain comfortable, this heat must be released from the body at approximately the same rate it is produced.
- It is released through several processes, including convection to surrounding air, thermal radiation to surrounding surfaces, conduction from skin or clothing surfaces that contact other (cooler) surfaces and evaporation of moisture through perspiration and respiration.
- Heat loss from the body due to convection, radiation and conduction adds to the room’s sensible cooling load. Heat loss due to evaporation of moisture adds to the room’s latent cooling load.

Activity Level of Occupants

- The following table lists some common heat gain factors for various activity levels of occupants.
- The column labelled “Adjusted total heat output” corrects the column labelled “male total heat output” for a typical ratio of men, women and children in various occupied spaces.

Activity	Male TOTAL heat output (Btu/hr)	Adjusted total heat output (Btu/hr)	Sensible heat output (Btu/hr)	Latent heat output (Btu/hr)
Seated at rest	393	341	205	136
Seat light work	478	410	222	188
Light bench work	870	785	341	444

Infiltration & Ventilation

- Any flow of outside air into a conditioned interior space being maintained at lower dry bulb temperature or humidity, brings with it both sensible heat and latent heat. The sensible heat gain can be calculated if the difference between inside and outside dry bulb temperatures and the flow rate of air are known.
- In the case of ventilation, the required airflow rate can be calculated based on occupancy and ventilation standards, such as ASHRAE 62.2-2013. Typical ventilation air rates are in the range of 15 to 20 CFM per person. The airflow associated with air leakage of the building should also be estimated based on construction quality, building siting and usage of doorways.

Chilled Water Temperature

- In conjunction with fan-coils/air handlers such as SpacePak’s SDHV AirCell units, the temperature at which chilled water should be supplied to a heat absorber varies significantly based on the intended functions of that heat absorber.
- In the case of such an air handler that provides both sensible and latent cooling, common chilled-water supply temperatures at design load conditions vary from about 42°F to 48°F, with 45°F being a commonly selected supply water temperature for design load conditions.

Temperature Rise

- The temperature rise of the water as it passes through the heat absorber can vary from a minimum suggested value of 8°F to a maximum of 20°F. The lower end of this range (8°F) requires a water flow rate of 3 gpm per ton of cooling capacity. The upper end of the range (20°F) requires a flow rate of 1.2 gpm per ton of cooling capacity.
- Higher flow rates, and thus lower temperature rises, tend to improve the total cooling capacity of the heat absorber, albeit at the expense of higher pumping power. For residential and light-commercial chilled-water cooling applications, a design temperature rise of 10°F to 15°F is suggested.
- If the air handlers are located far from the chilled-water source, a design temperature rise of 15°F to 20°F is suggested to limit pumping power requirements. *Keep in mind that every watt of power required to operate a circulator, a blower or a fan is a watt of added cooling load on the system.*

Dewpoint Temperature

- Heat absorbers, such as chilled beams and radiant ceiling panels, are only used for sensible cooling. The chilled-water temperatures supplied to these panels must always remain above the current dewpoint temperature of the spaces they serve.
- Chilled beams are typically sized and selected to operate at supply water temperatures in the range of 55°F to 60°F under design load conditions.
- Radiant ceiling panels, given their large surface area, can operate at even higher chilled-water supply temperatures, typically in the range of 60°F to 66°F.

Chilled Water Temperature

- The temperature at which chilled water must be supplied can significantly affect the thermal efficiency of the chiller. It may even determine what sources of chilled water are possible.
- The EER of a vapor compression chiller, or the GUE (gas utilization efficiency) of an absorption cycle chiller, decrease as the temperature of the chilled water they supply decreases.

Cooling System Design

- Designing around low chilled-water supply temperatures increases operating cost. The limiting factor in systems that supply both sensible and latent cooling is typically the supply water temperature required for the latter.
- The water temperature must be low enough so that the coil surface on which water vapor will condense can remove moisture from the air at a rate that satisfies the latent cooling load.
- That temperature will depend on the overall surface area of the coil, the number of tube passes through the coil and the rate of airflow across the coil.
- Coils with four or more tube passes, and operated at airflow rates no higher than 400 CFM per required ton (12,000 Btu/hr) of required total cooling capacity, generally provide adequate latent cooling capacity.

Cooling Performance of GSHPs

- The thermal performance of any heat pump providing cooling is given by two indices:
  - Cooling Capacity
  - Energy Efficiency Ratio (EER)

Cooling Capacity of GSHPs

- Cooling capacity represents the *total* cooling effect (sensible cooling plus latent cooling) that a given heat pump can produce while operating at specific conditions.
- Heat pumps that deliver cooling through a forced-air distribution system have separate ratings for sensible and latent cooling capacity.
- However, a water-to-water heat pump has a single total cooling capacity rating. This rating is affected by the temperature of the fluid streams passing through the evaporator and condenser.
- To a lesser extent, it’s also affected by the flow rates of these two fluid streams.

GSHP Cooling Capacity

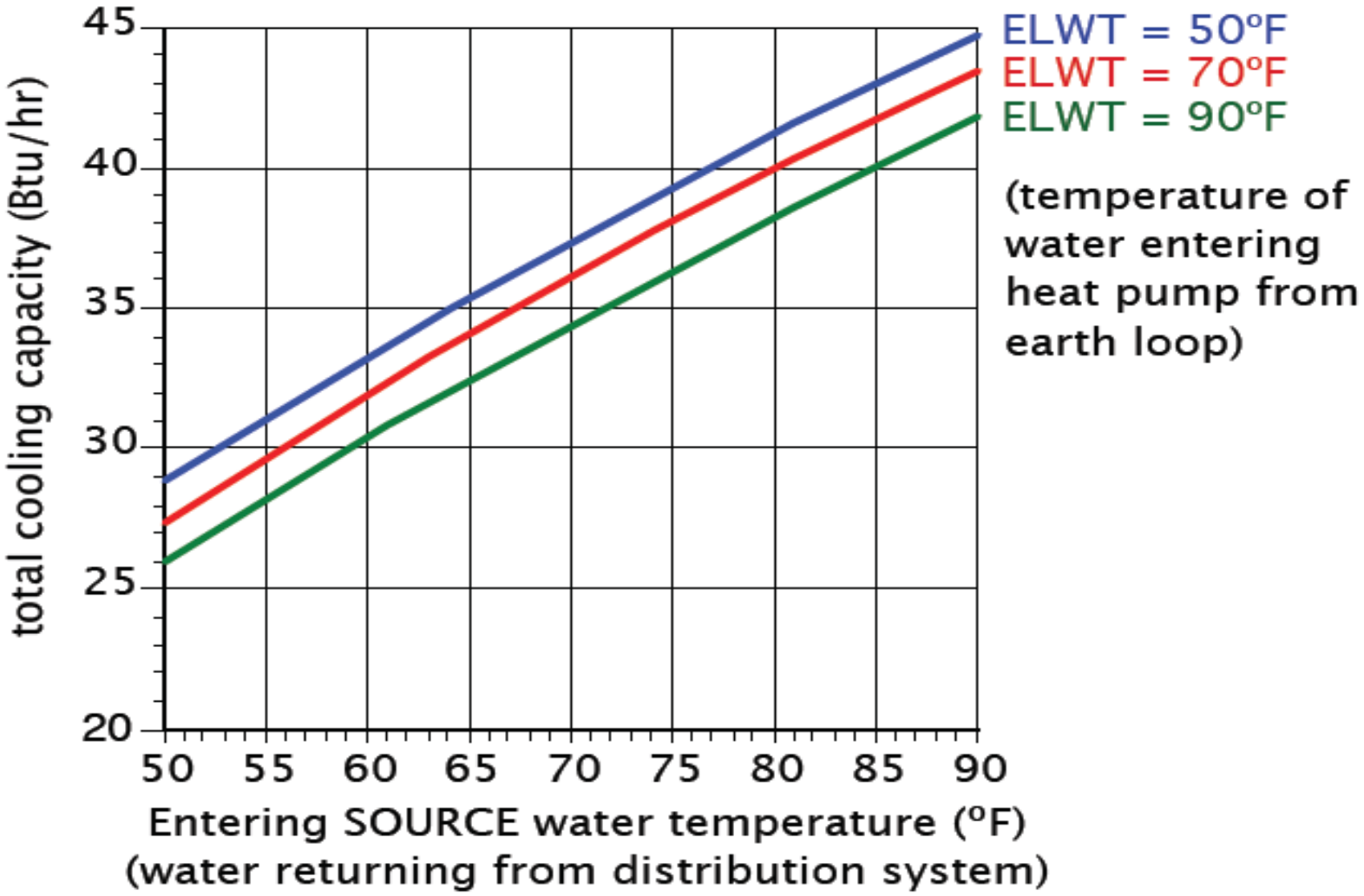

Minimizing Temperature Differential of EWT and LWT for GSHPs

- The cooling capacity of a typical water-to-water heat pump with a nominal cooling capacity of 3 tons (36,000 Btu/hr) is represented graphically in the above table.
- The horizontal axis shows entering *source* water temperature. *This is the temperature of the water returning from the cooling distribution system, and flowing into the heat pump's evaporator.*
- The three sloping curves on the graph represent three entering load water temperatures. These represent the temperature of the fluid stream to which the heat is being dissipated.
- For example, the blue line showing an ELWT of 50°F could represent fluid returning from an earth loop and entering the heat pump at 50°F.

Minimizing Temperature Differential of EWT and LWT for GSHPs cont.

- As the temperature of the entering source water goes up, so does the heat pump's cooling capacity.
- Thus, the heat pump yields a higher cooling capacity when supplied with 60°F water compared to when it is supplied with 50°F water.
- The *leaving* chilled water temperature will typically be 8°F to 12°F lower than the entering source water temperature.
- It can also be seen that increasing the temperature of the fluid into which heat is dissipated (an earth loop for example) *lowers* the heat pump's cooling capacity.

Energy Efficiency Ratio

- In North America, the common way of expressing the instantaneous cooling efficiency of a heat pump is an index called EER (Energy Efficiency Ratio), which is defined as follows:

$$EER = \frac{Q_c}{W_e} = \frac{Cooling\ Capacity\ (\frac{Btu}{hr})}{Electrical\ Input\ Wattage}$$

where:

- **EER = Energy Efficiency Ratio**
- **Q_c = cooling capacity (Btu/hr)**
- **W_e = electrical input wattage to heat pump (watts)**

- The higher the EER of a heat pump, the lower the electrical power required to produce a given rate of cooling.
- Like COP, the EER of a water-to-water heat pump is a function of the source and load water temperature. This variation is shown in the following table.

EER of GSHP

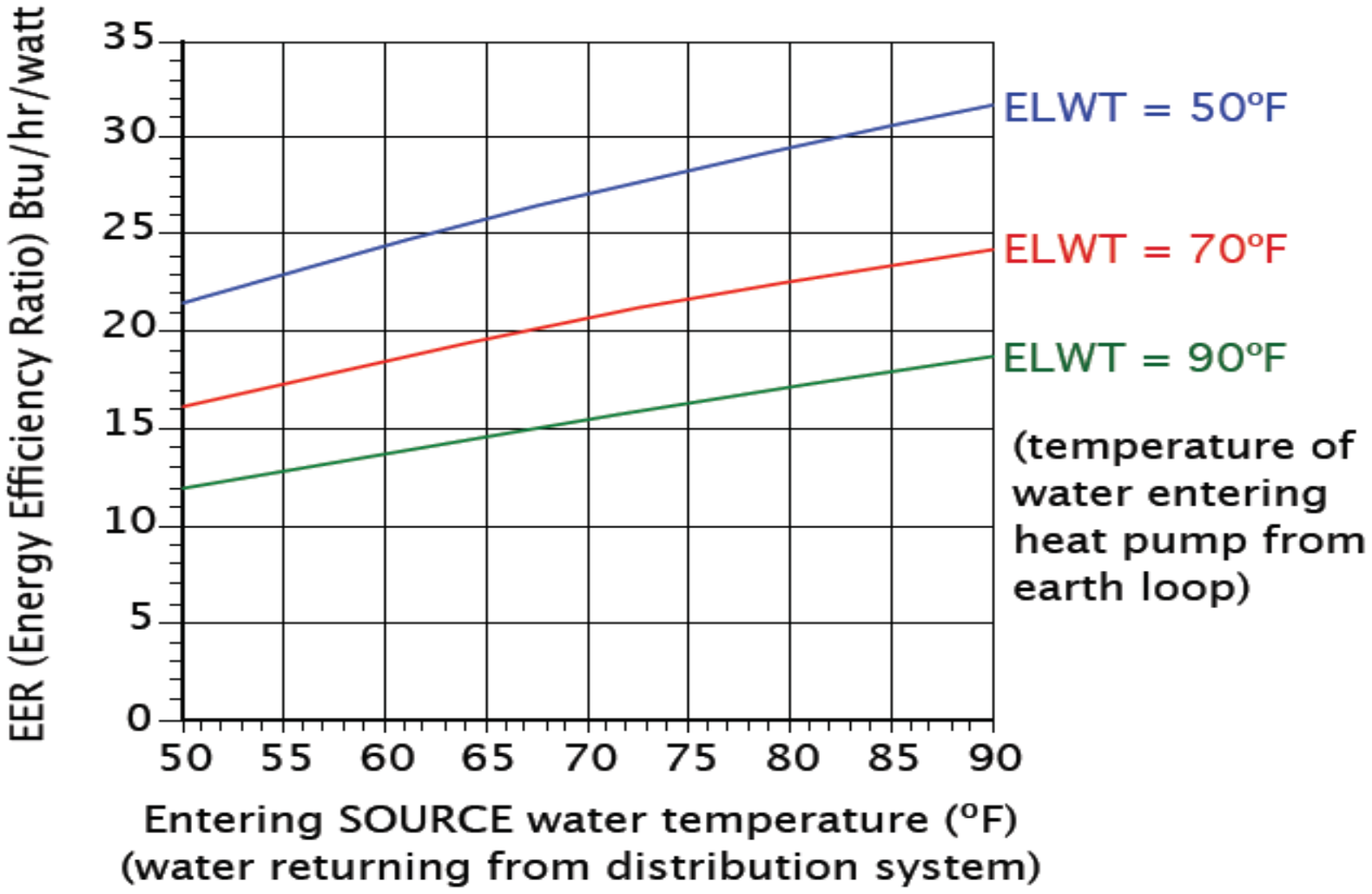
EER (Energy Efficiency Ratio) Btu/hr/watt
35
30
25
20
15
10
5
0
50
55
60
65
70
75
80
85
90
ELWT = 50ºF
ELWT = 70ºF
ELWT = 90ºF
(temperature of water entering heat pump from earth loop)
Entering SOURCE water temperature (ºF)
(water returning from distribution system)

Distribution Sub-system Design

- The above graph reveals that the EER increases as the temperature of the entering source water (e.g., the water temperature returning from the cooling distribution system) increases.
- However, higher entering source water temperature reduces the distribution system's ability to cool and dehumidify the building. It can also be seen that the cooler the load water temperature (e.g., the water into which heat is being rejected), the higher the EER.
- Design decisions that reduce the temperature difference between the entering source water (primarily into the buffer tank) and load water will improve the cooling capacity and EER of the heat pump.

Fluid Flow Rate Design

- Higher fluid flow rates through the evaporator, the condenser or both, will also increase cooling capacity and EER.
- However, increased flow also requires higher electrical power input to the circulator(s) creating this flow.
- Flow rates above 3 gallons per minute per ton (12,000 Btu/hr) of heat transfer are not necessary or desirable.

Heat Absorbers for Hydronic Cooling

- There are several devices that can absorb heat from a room and transfer that heat to a stream of cooling water.
- Others are integrated into the construction of the building.
- For integration of solar thermal and GSHP systems, hydronic radiant heating and cooling and a low pressure hydronic fan-coil/air handler is an deal fit for the PHMH.

Fan-coil/Air Handler Technology

- One of the most common heat absorbers used in chilled water cooling systems is an air handler or fan-coil.
- A basic air handler consists of a chilled-water coil, condensate drip pan, air filter, blower, drip pan, and enclosure.

Fan-coil/Air Handler Illustration

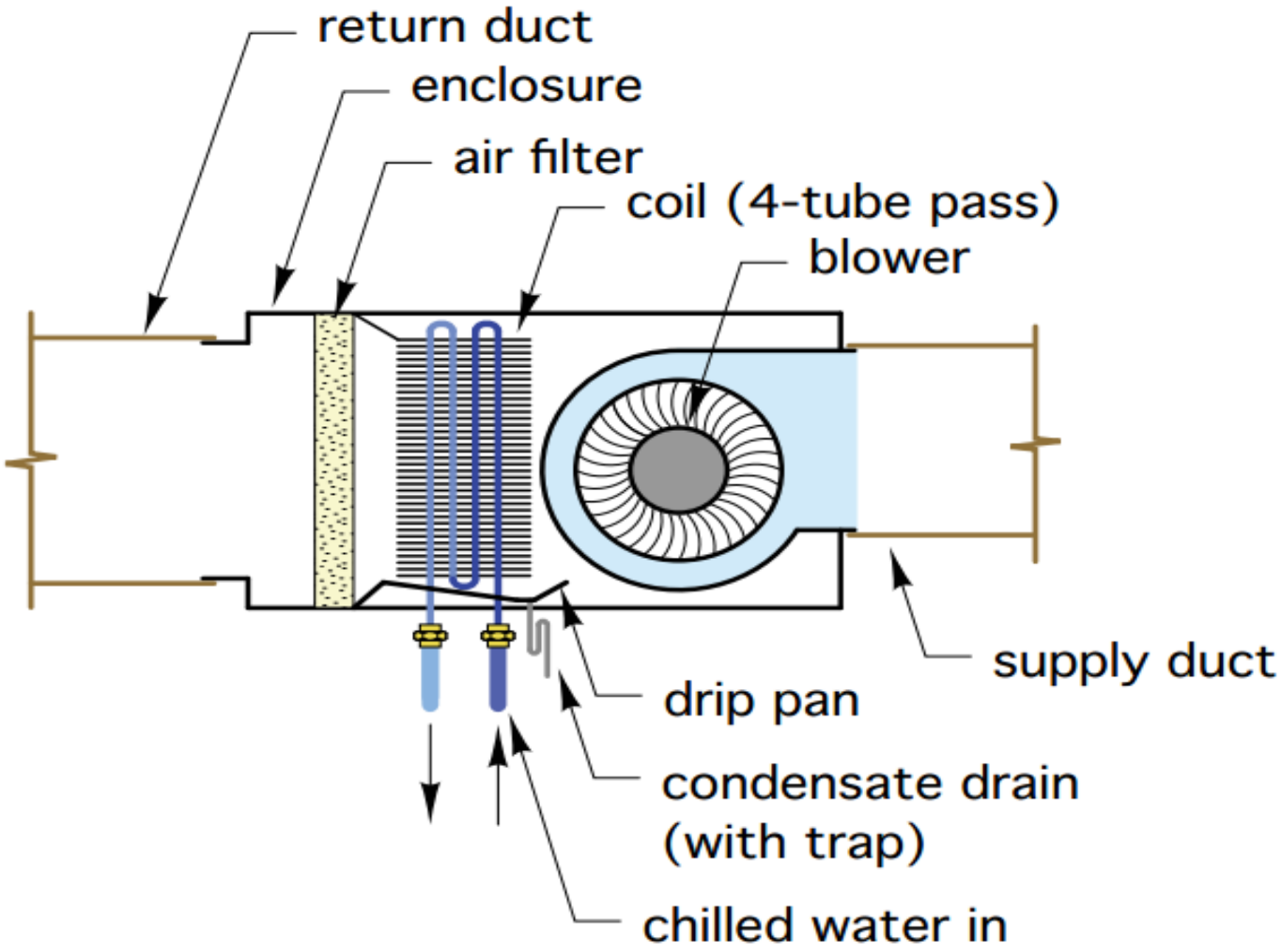

Cooled/Dehumidified Air

- Air handlers are available in a wide range of rated cooling capacities, ranging from about 1 ton (e.g., 12,000 Btu/hr), to several hundred tons. The types used in residential and lighter commercial systems typically have rated cooling capacities of 1 to 6 tons.
- Several manufacturers offer air handlers with either vertical or horizontal cabinets. Vertical cabinet models are similar in appearance to a residential furnace. Return air ducting is connected to the lower side or bottom of the unit. The cooled/dehumidified air is discharged from the top of the unit.
- Horizontal air handlers are designed to be suspended from an overhead structure such as a concrete slab, wood framing or steel trusses.

Air Handler Ratings

- Most air handlers are rated at specific operating conditions
  - Entering chilled-water temperature: 45 °F
  - Incoming air conditions
    - Dry bulb temperature = 80 °F, wet bulb temperature = 67 °F
    - Dry bulb temperature = 75 °F, wet bulb temperature = 63 °F
  - The thermal output ratings for chilled-water air handlers are usually expressed as:
    - Total cooling capacity (Btu/hr)
    - Sensible cooling capacity (Btu/hr)

Sensible & Latent Cooling Capacity

- Sensible cooling capacity refers to the air handler’s ability to lower the temperature of the air as it passes through the unit.
- Latent cooling capacity is a measure of the air handler’s ability to remove moisture from the air stream.
- Total cooling capacity is the sum of sensible cooling capacity and latent cooling capacity.
- Thus, latent cooling capacity can be obtained by subtracting sensible cooling capacity from total cooling capacity.

Latent Energy – Phase Changes of Water

- Transitions between solid, liquid, and gaseous phases typically involve large amounts of energy compared to the specific heat.
- If heat were added at a constant rate to a mass of ice to take it through its phase changes to liquid water and then to steam, the energies required to accomplish the phase changes (called the latent heat of fusion and latent heat of vaporization) would lead to plateaus in the temperature vs. time graph.
- The graph below presumes that the pressure is one standard atmosphere.

Latent Energy - Phase Changes of Water

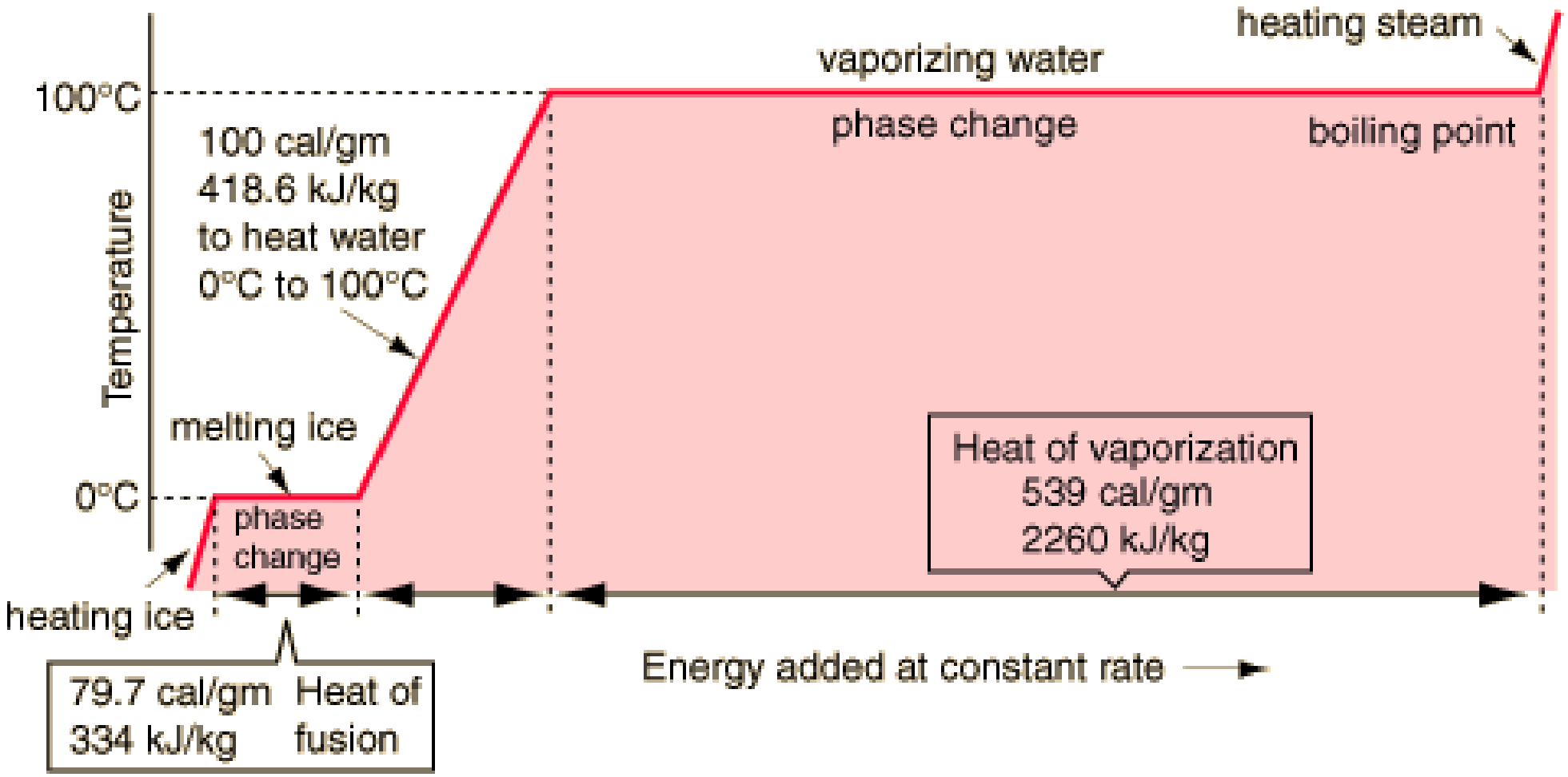

Other Air Handler Performance Measures

- Other performance measures for air handlers include:
  - Fluid head loss or pressure drop across the coil as a function of the flow rate through the coil.
  - Air flow rate produced by the blower as a function of the external static pressure of the ducting system. This is typically stated in cubic feet per minute (CFM), versus the static pressure of the duct system, which is stated in inches of water column (e.g., inch w.g.). If the air handler has a multiple speed motor, this information is often given for each speed setting.
- A typical airflow rate for a chilled-water air handler is 400 CFM per ton of delivered cooling capacity. The temperature rise across the coil is usually in the range of 8 °F to 16 °F.

Fluid Flow Rate

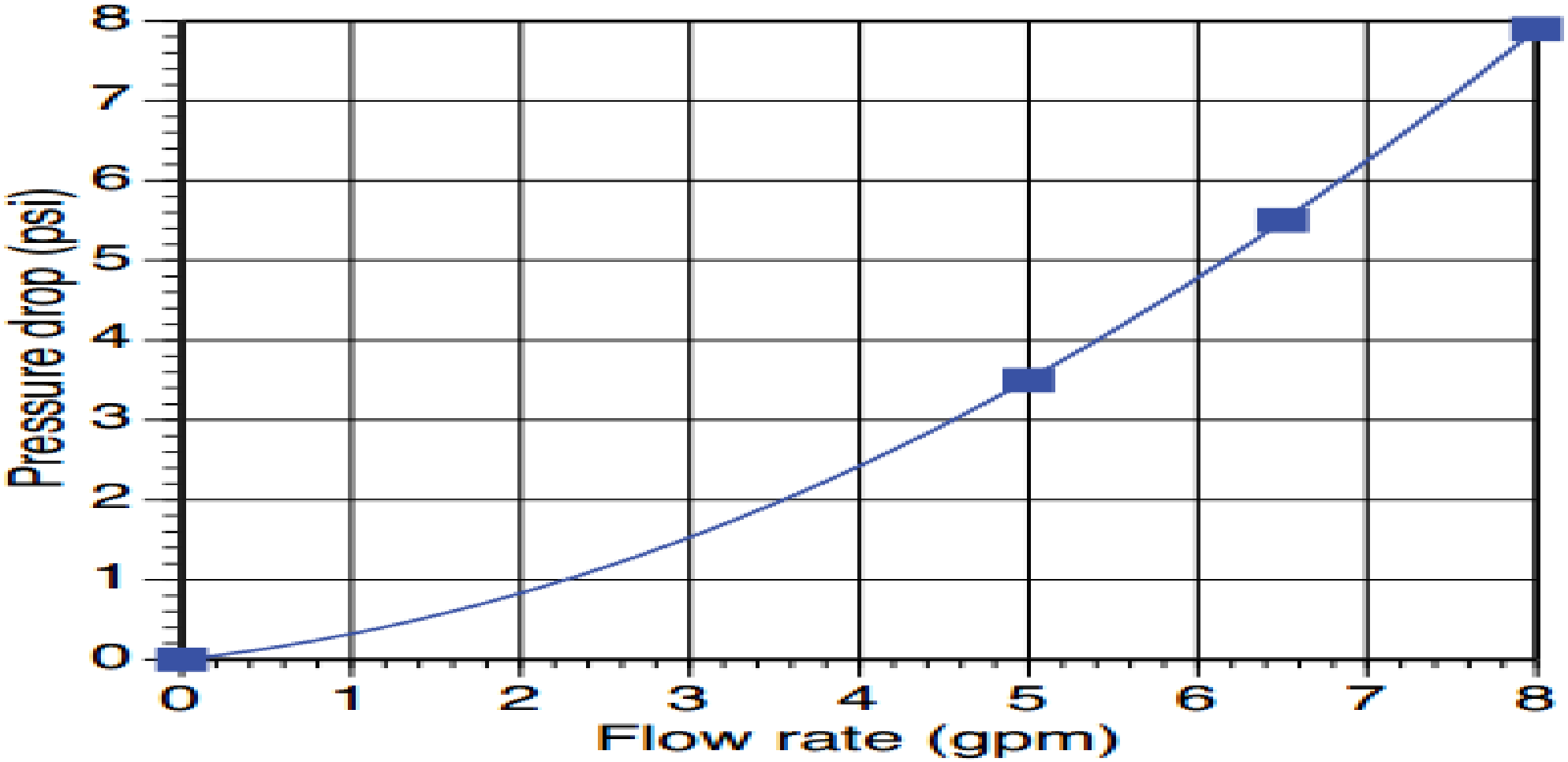

Airflow Rate

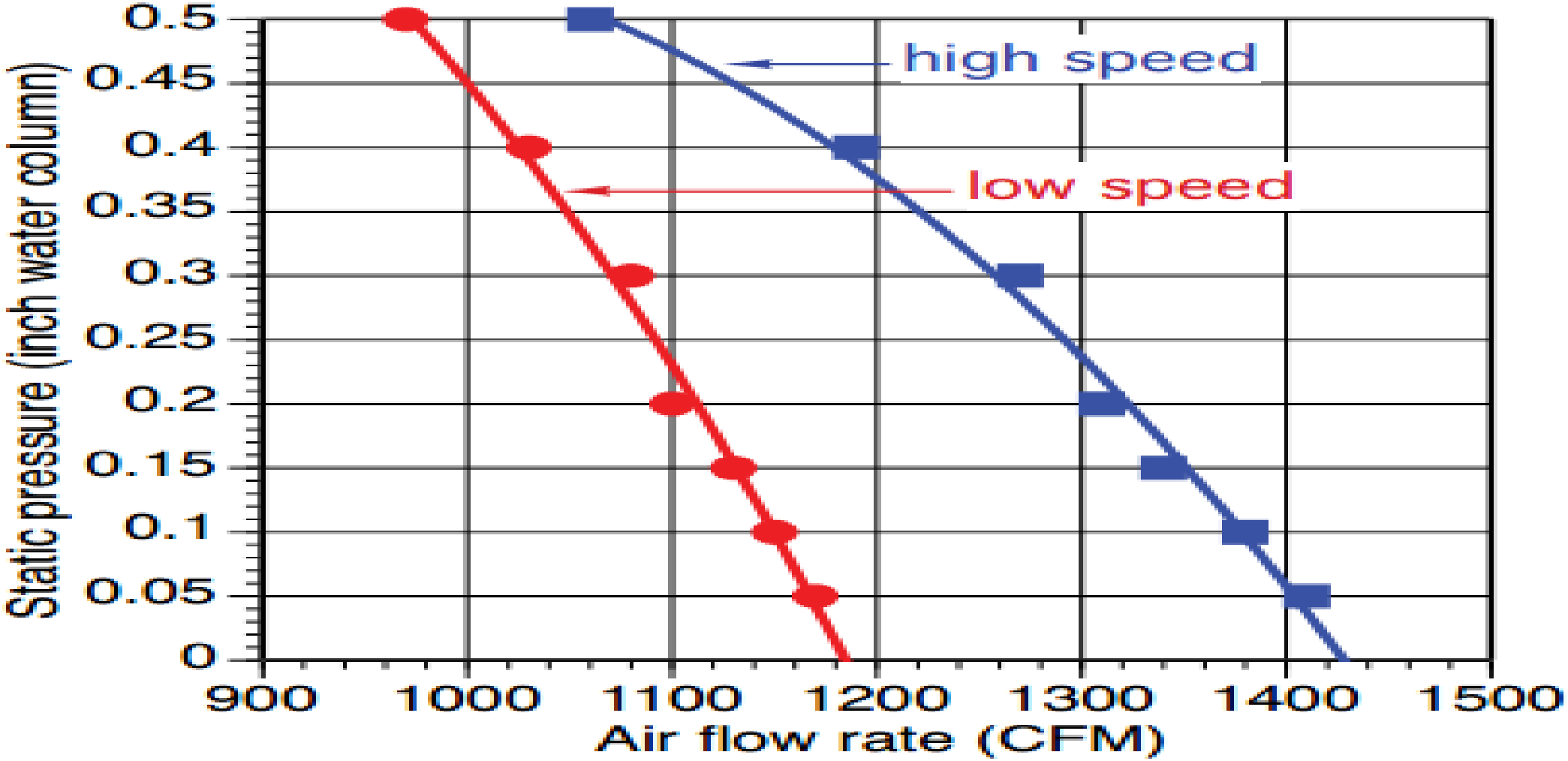

Radiant Cooling

- A radiant cooling system refers to a temperature-controlled surface that cools indoor temperatures by removing sensible heat and where more than half of heat transfer occurs through thermal radiation.
- Heat will flow from objects, occupants, equipment and lights in a space to a cooled surface as long as their temperatures are warmer than that of the cooled surface and they are within the line of sight of the cooled surface.
- The process of radiant exchange has a negligible effect on air temperature, but through the process of convection, the air temperature will be lowered when air comes in contact with the cooled surface.
- Radiant cooling systems use the opposite effect of radiant heating systems, which rely on the process of heat flow from a heated surface to objects and occupants.

Hydronic Delivery System

- Radiant cooling systems are usually hydronic, cooling using circulating water running in pipes in thermal contact with the surface.
- Typically the circulating water only needs to be 2-4°C below the desired indoor air temperature.
- Once having been absorbed by the actively cooled surface, heat is removed by water flowing through a hydronic circuit, replacing the warmed water with cooler water.

Removing Sensible Heat via Radiant Exchange

- Since the majority of the cooling process results from removing sensible heat through radiant exchange with people and objects and not air, occupant thermal comfort can be achieved with warmer interior air temperatures than with air based cooling systems.
- As a result of the high cooling capacity of water, and the delivery of a cooled surface close to the desired indoor air temperature, radiant cooling systems potentially offer reductions in cooling energy consumption.
- Latent loads (humidity) from occupants and infiltration will be managed through integration of ERVs & air handlers.
- Radiant cooling will also be integrated with other energy-efficient strategies such as night time flushing, indirect evaporative cooling, and ground source heat pumps as it requires a small difference in temperature between desired indoor air temperature and the cooled surface.

Radiant & Forced Air Systems

- Ideally, radiant systems are installed with a small but adequate forced air system for the following reasons:
  - Radiant heating cannot meet all of the heating needs of a structure.
  - Radiant cooling can only address the sensible cooling load, not the latent cooling system (only forced air systems and humidifiers can regulate humidity).
  - However, when integrated with radiant floor systems, forced air systems can be downsized substantially which makes this approach ideal for providing ultimate year round comfort and unprecedented energy efficiency, particularly for energy efficient homes.

Dew Point Temperature

- A limiting factor for the floor temperature and the cooling capacity is the dew-point temperature in the space.
- Some standards recommend a limit for the relative humidity in a space to 60% or 70% relative humidity, which at an air temperature of 26°C (79°F) corresponds to a dew point between 17°C and 20°C (63°F and 68°F).
- Others recommend an absolute humidity level of approximately 11.5 g/kg (80 gr/ lb), which corresponds to a dew point of 16°C (61°F).

Regulating Humidity & Cooling Capacity

- This means the floor surface temperature must be higher than 16°C to 20°C (63°F and 68°F).
- The use of dehumidification in a room by an air-conditioning system or a simple dehumidifier will decrease the dew-point temperature and then increase the cooling capacity of a floor system.

Hydronic Floor Cooling Capacity

- The important factors for the heating and cooling capacity of surface systems are the heat exchange coefficient between the surface and the room, the acceptable minimum and maximum surface temperatures based on comfort and consideration of the dew point in the space and heat transfer between the pipes and the surface.

Heat Exchange Coefficient

- The heat exchange coefficient depends on the position of the surface and the surface temperature in relation to the room temperature (heating or cooling).
- While the radiant heat exchange coefficient is for all cases approximately 5.5 $W/m^2 \cdot K$ (0.97 $Btu/h \cdot ft^2 \cdot °F$), the convective heat exchange coefficient will change.

Heat Exchange Coefficient Tables

	Total Heat Exchange Coefficient W/m²·K		Surface Temperature °C		Capacity W/m²	
	Heating	Cooling	Maximum	Minimum	Heating	Cooling
Floor	11	7	29	20	99	42
Wall	8	8	~40	17	160	72
Ceiling	6	11	~27	17	42	99

Table 1: Heat exchange coefficient, minimum and maximum recommended surface temperature and cooling and heating capacity.[2,8]

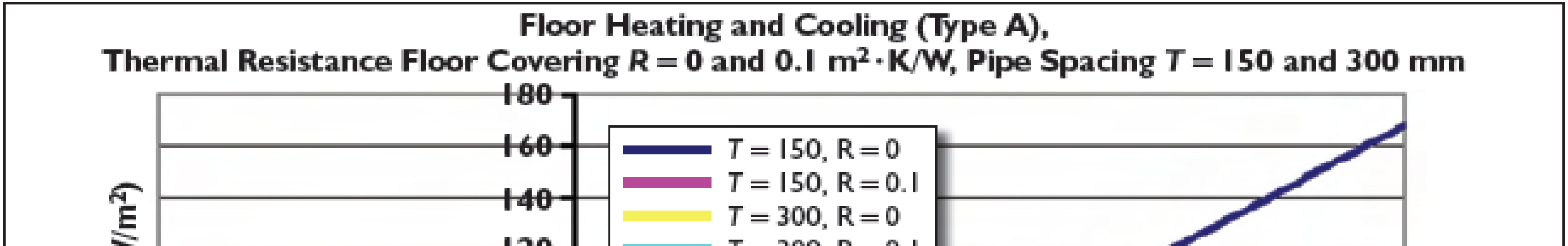

Surface Temperatures

- The listed maximum temperature for the wall is based on the pain limit for skin temperature, approximately 42°C (108°F), and the risk of being in contact with the wall over a longer period of time.
- The maximum temperature of the ceiling is based on the requirement to avoid temperature asymmetry.
- The minimum surface temperatures for wall and ceiling are based on consideration of the dew point and risk of condensation.

Floor Cooling & Solar Radiation

- A special case for floor cooling is when there is direct sun radiation on the floor. Then the cooling capacity of the floor may exceed 100 W/m^2 (32 $Btu/h \cdot ft^2$).
- This is also why floor cooling is increasingly used in spaces with large glass surfaces such as airports, atriums, and entrance halls.

Radiant System Costs

- Typically, radiant floor systems can cost $5-6 sqft to install, which is substantially more than forced air systems (home owners can install much of their own radiant flooring system and thus provide sweat equity which reduces costs to less than $0.50 sqft for ICF structures).
- However, in terms of comfort and energy efficiency radiant systems are advantageous, even for very energy efficient structures, particularly all ICF structures due to the density, conductivity and heat capacity of concrete and how this affects storage of thermal energy via thermal mass.

Integrated Radiant & Forced Air Systems

- When properly designed, radiant heating and cooling can be integrated with a small but adequate forced air system.
- For ICF structures, the additional costs can be minimized since the floors are constructed of concrete.
- Solar thermal and GSHPs can be included in the design, providing unsurpassed energy efficiency, comfort, and redundancy with an acceptable ROI.

Radiant Flooring System Design

- 7/8” pex tubing on 8” centers will provide an opportunity to optimize energy efficiency by:
  - Operating at lower temperatures in the winter
  - Operating at high temperatures in the summer
- The result is a lower temperature differential for EWT and LWT without increasing the flow rate.
- This results in boosting the COP of the GSHP.
- In the winter, integration of solar thermal will further enhance energy efficiency and increase COPs of GSHPs by over two-fold for integrated systems.

Strategic Environmental Design

- A key to simplifying radiant cooling is to strategically design the radiant cooling system within the building envelope.
- The perimeter solar gains and thermal transmission loads must be reduced to as low as possible to allow the radiant cooling system to operate properly.
- Radiant cooling capacity is limited by the cooling surface temperature being just above the dew point of the ambient air in the space to be cooled.
- This means that the minimum effective temperature of the radiant cooling surface in most building applications is around 61-65°F to avoid condensation.

ASHRAE Design Temperatures

- In arid Santa Fe, the ASHRAE design temperature is 64°F in summer. If liquid temperatures within the tubing are above that, there are no condensation issues.
- As stated in a number of occupant comfort studies, the human comfort factors are generally made up of 50% radiation, 30% convection, and 20% evaporation.
- According to Maze, in North America, many mechanical engineers are very concerned with air temperature control and the use of all-air-type air conditioning systems — the radiant comfort part of the equation is more or less ignored.

Energy-Neutral Air System

- Once the building interior is maintained at a constant temperature, and the transient heat gains around the perimeter have been nearly eliminated, there is very little need for any temperature-compensating controls.
- The air system just needs to supply outdoor air for ventilation, and does not need to do any space temperature control.
- This ventilation air can be supplied at near room temperature via a displacement ventilation system. An air-to-air heat exchanger such as an ERV can provide a virtually energy-neutral air system.

Evaporative Cooled Radiant Systems

- The energy efficiency of these systems becomes even more appealing in areas where the night temperatures are regularly below 59°F during the summers.
- This allows a fluid (evaporative) cooler to be used exclusively for heat rejection similar to an earth tube or horizontal field loops also used for GSHPs.
- Climates where the relative humidity is high throughout the summers may require dehumidification equipment for the ventilation supply air system, which would impact the capital and operating costs.

Radiant Floor Cooling Summary

- A hydronic floor cooling system provides sensible cooling without noise, draft, obstacles, or the need for cleaning.
- The maximum cooling capacity for most spaces is less than 50 W/m^2 (16 $Btu/h \cdot ft^2$). In spaces where the sun shines directly on the floor (atrium, entrance hall, showroom), the cooling capacity is significantly higher—up to 100 W/m^2 (32 $Btu/h \cdot ft^2$).
- A floor cooling system must be controlled to avoid condensation. This can be accomplished with a supply water temperature that is controlled to stay 3°F above the dew-point temperature.

Sweat Equity

- For well designed radiant flooring and hydronic systems, most new home buyers can install their own pex tubing in a matter of hours during a weekend and reduce costs for ICF structures with concrete floors for $0.50-$1.00 sqft. depending on pex tubing spacing.

Monitoring Dewpoint Temperatures

- Dewpoint temperatures vary both with time and location within the building. The dewpoint temperature within an entry vestibule, subject to frequent door openings on a sultry summer day, could be several degrees Fahrenheit above the dewpoint temperature of an interior space.
- If the chilled-water supply temperature to radiant panels or chilled beams in both spaces is controlled by a single mixing device, but the dewpoint is only sensed within the interior space, it’s possible that condensation could form on the vestibule panel or chilled beam due to localized higher humidity.

Designing for Dewpoint Zoning

- To prevent such issue, designers have to consider when and where localized sources of moisture may occur. Such areas include those used for food preparation, washing, exercising or areas with significant air infiltration through exterior doors or windows.
- These areas should be equipped with separate dewpoint sensors. The chilled-water distribution system should also be zoned and equipped with mixing devices that allow each of these zones to adjust the water temperature supplied to the chilled beams or radiant panels in response to changes in dewpoint.

Dewpoint Zoning Design

- The following schematic shows one possible approach. Each radiant panel zone is equipped with its own manifold. The chilled-water temperature supplied to each manifold is independently regulated by a 3-way motorized mixing valve, operated by a dewpoint controller monitoring conditions within that zone.
- Each zone is hydraulically isolated from the differential pressure in the chilled-water mains using a crossover bridge with a flow balancing valve and zone valve.

Example of a Dewpoint Zoning Design

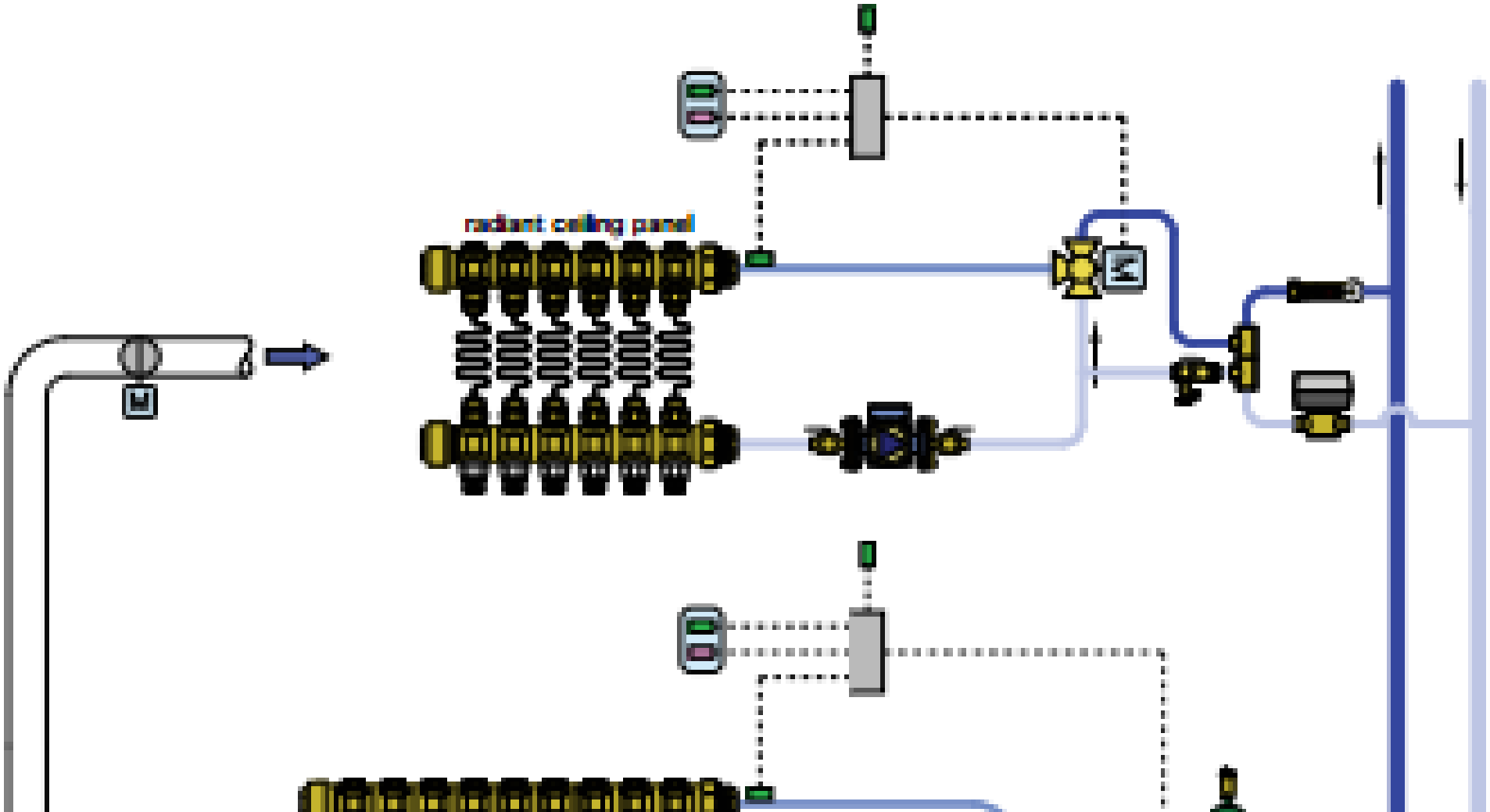

Example of a Dewpoint Zoning Design

- In the above illustration, outdoor air for ventilation is conditioned by a chilled-water coil with an air handler. The chilled-water flow rate through that coil is controlled by a variable speed circulator pump, which in turn is controlled by a relative humidity controller.
- When the relative humidity of the air discharged from the air handler rises above setpoint, the circulator pump increases speed, which increases the latent cooling capacity of the coil, and thus removes more moisture.
- Airflow to each zone is controlled by zone dampers. The blower speed is controlled by a variable frequency drive (VFD) fan based on the static pressure in the supply air duct.

Integration of Radiant Cooling & HRV/ERV Technologies

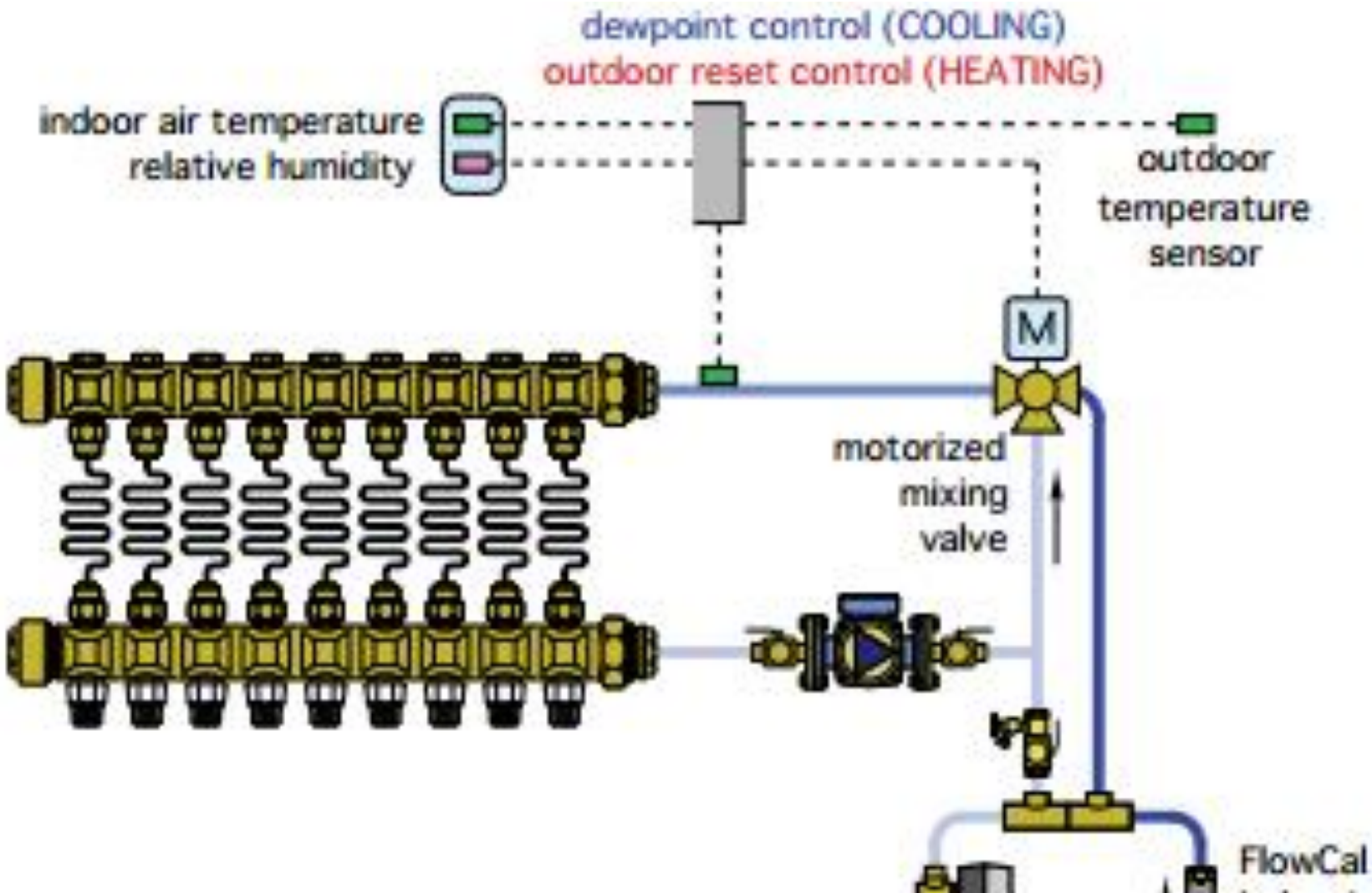

Cooling & Dehumidifying

- The HRV recovers some of the “cooling effect” from air leaving the conditioned space before discharging that air outside.
- The main component of the HRV is a plastic or aluminum “core,” which functions as a plate heat exchanger. It allows heat to transfer from the warmer air stream to the cooler air stream without allowing the two air streams to mix.
- In cooling mode, a significant amount of heat from the incoming (outdoor) ventilation air is transferred to the air stream coming from the conditioned space before it is exhausted outside. This helps to cool and possibly dehumidify the incoming air, and thus reduces the sensible, and possibly the latent, cooling load on the chilled-water coil located farther downstream.

Integration of GSHPs & HRV/ERV Technology

- The above schematic also shows the option of a geothermal “preconditioning” coil that is connected to a closed earth loop.
- When the HRV is operating, an antifreeze solution is circulated between the earth loop and coil.
- If the earth loop is buried several feet below the earth’s surface, it could be exposed to soil in the temperature range of 45ºF to 65ºF, depending on location and time of year.
- The earth loop circuit can therefore act as a heat sink, removing heat from the incoming hot air and dissipating it to the earth.

Preconditioning for Summer & Winter

- The earth loop circuit can also be operated in winter to preheat incoming air before it passes through the core of the HRV.
- If this mode of operation is used in cold climates, the circuit must be filled with a suitable concentration of propylene glycol antifreeze to protect the coil against subfreezing air temperatures.
- In systems where the coil circuit is operated in both heating and cooling mode, the cooling effect of extracting heat from the soil in winter helps provide better preconditioning of incoming warm air in summer.
- Being a closed loop, this circuit can be designed to operate on relatively low pumping power. If an ECM-based circulator is used, the circulator input power for the circuit in a typical residential application should be under 60 watts.

Integrated Controls

- With suitable controls, the same mixing valve that regulates chilled-water supply temperature could also be used to regulate the temperature of warm water supplied to the radiant floors for heating.
- The control logic for heating would likely be outdoor reset control, as illustrated in the following.

Outdoor Reset & Dewpoint Controls

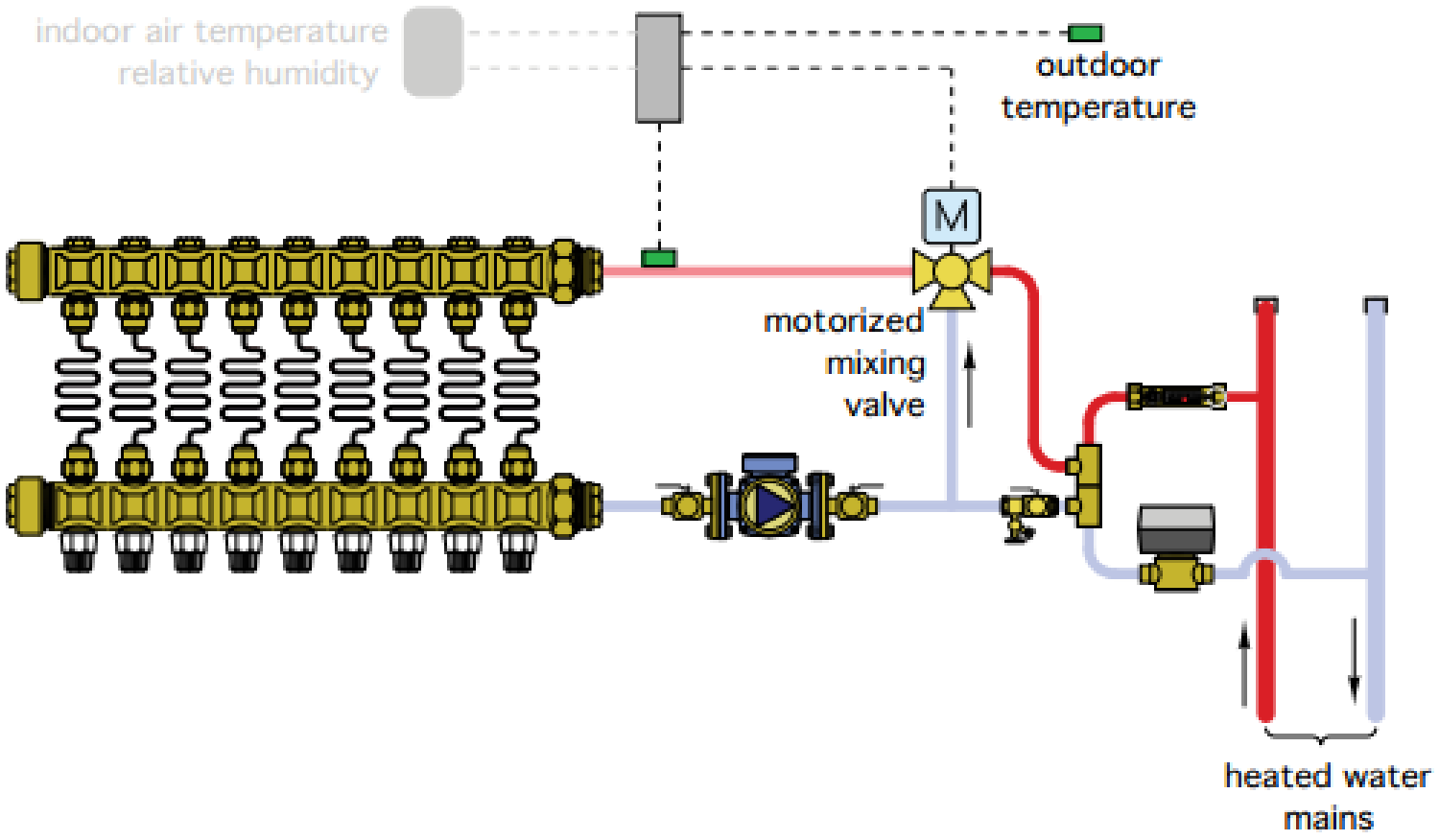

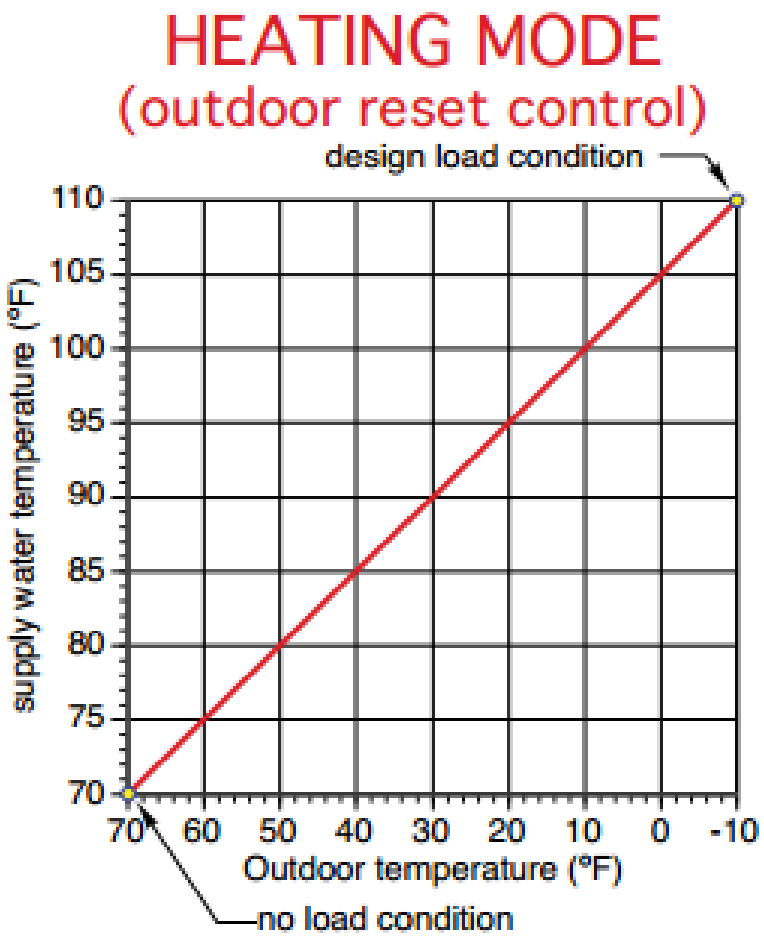

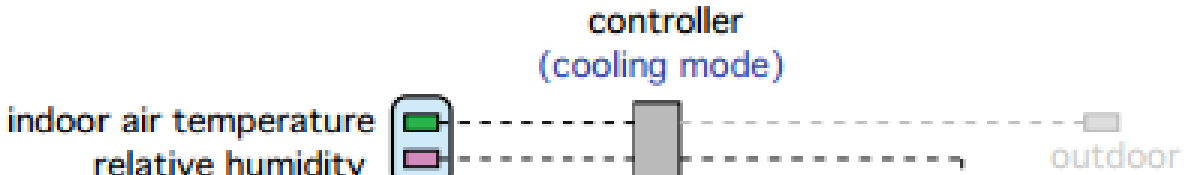

Integrated Solar Thermal & GSHP System

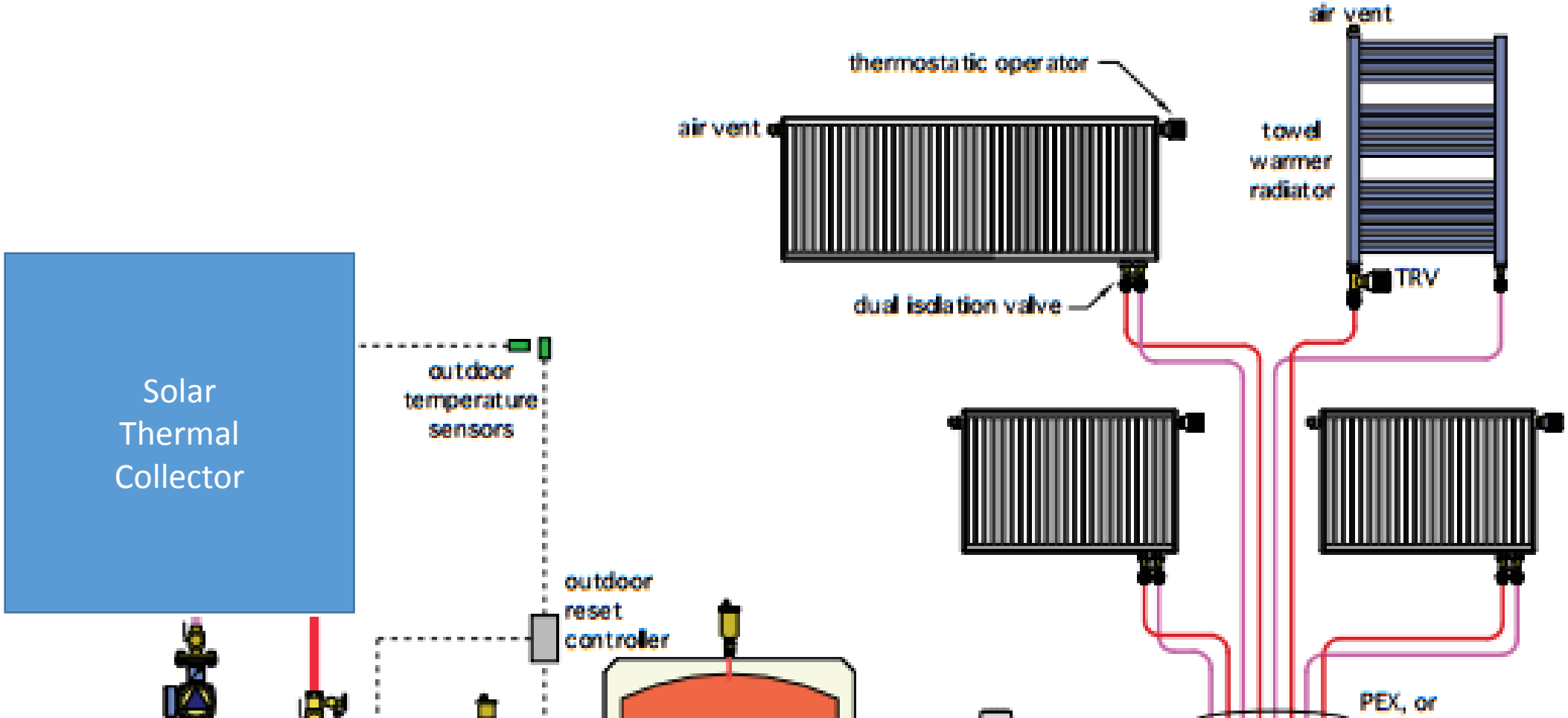

Integrated Solar Thermal-GSHP System

- The modulated condensed boiler has been replaced with a solar thermal collector which is the primary source of heat for this system.
- The GSHP is utilized as a backup or stage two heating source, and primary cooling source for this hydronic application, e.g., both radiant and forced air handler systems.

Single Cooling Zone

- This system includes multiple zones for heating, but a single zone for cooling. This approach may be used to reduce cost in homes where the heating load is dominant, but a source of chilled water, such as a geothermal water-to-water heat pump, is present, and thus the option of adding cooling would not be as expensive as it would be using other approaches, such as a completely separate dedicated cooling system.
- The above system illustrates and integrated solar thermal-GSHP system that provides a single zone of cooling and makes use of some of the rejected heat. This system uses a reversible geothermal water-to-water heat pump that provides both warm water for heating and chilled water for cooling.

Heating Mode: Outdoor Temperature Reset

- In the heating mode, the heat pump is operated by an outdoor reset controller that monitors the temperature of the buffer tank and the outdoor temperature. This controller turns the heat pump on and off as necessary to maintain the buffer tank at a temperature that allows the distribution system to supply the building’s current heating load.
- The heat emitters are panel radiators that have been sized to deliver design load heat output when supplied with water at 120°F. Under partial load conditions, these panels can deliver the necessary heat output using lower temperature water.

Buffer Tank & COP

- The lower the water temperature, the higher the coefficient of performance (COP) of the heat pump.
- The buffer tank allows the thermostatic radiator valves on the panel radiators to modulate flow through the panels as needed, without causing the heat source to short cycle.

Chilled-Water Buffer Tank Not Required

- In cooling mode, the heat pump delivers chilled water directly to a single air handling unit. This air handler is sized to dissipate the full cooling capacity of the heat pump at a chilled-water supply temperature of 45°F.
- It is equipped with a drip pan and condensate drain. Because the air handler is matched to the cooling capacity of the heat pump, there is no need of a chilled-water buffer tank.
- In cooling mode, some of heat produced by the compressor is removed from the refrigerant gas as it passes through the desuperheater heat exchanger within the heat pump. This heat is transferred to the buffer tank for eventual use in heating domestic water.